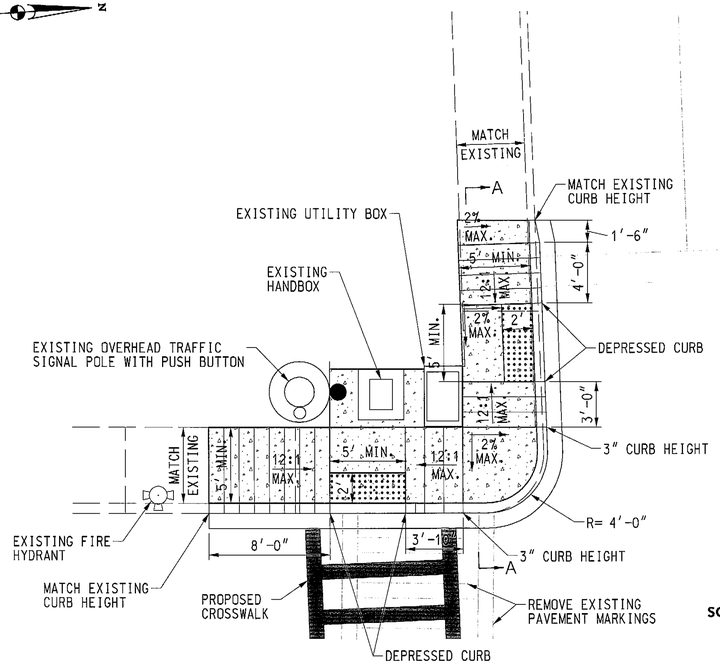

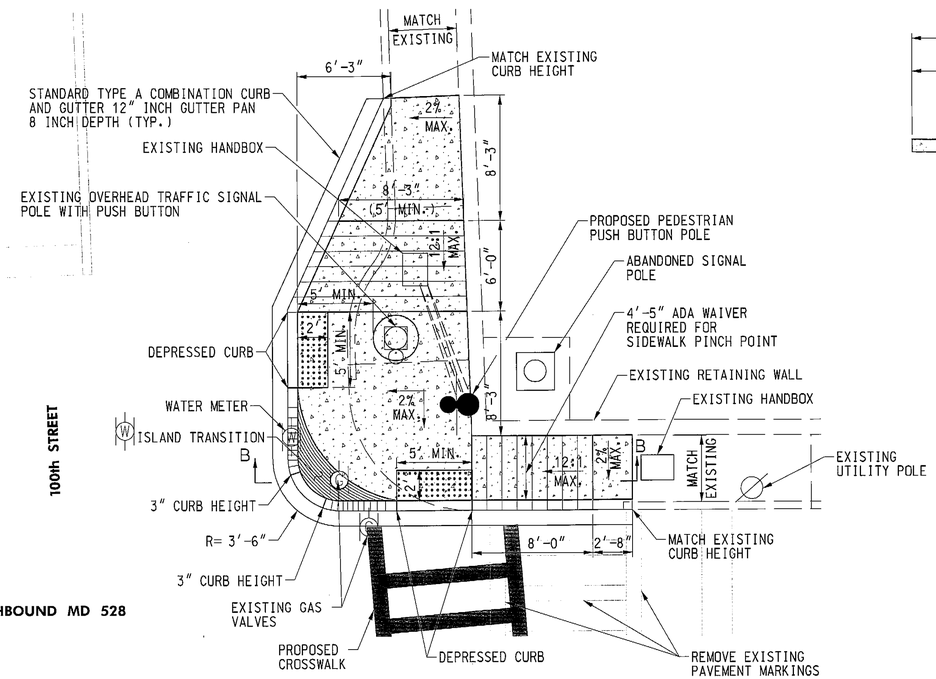

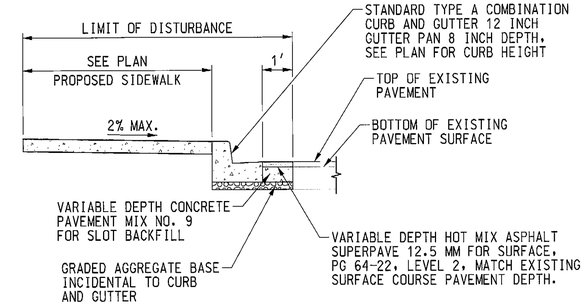

TYPICAL SIDEWALK SECTION

PROPOSED SIDEWALK WITH CURB REPLACEMENT AND SLOT BACKFILL
NOT TO SCALE

STANDARD TYPE A COMBINATION CURB AND GUTTER 12 INCH GUTTER PAN 8 INCH DEPTH SHA STD. NO. MD-620.02	
LOCATION	QUANTITY (LF)
NORTHWEST QUADRANT	52
SOUTHWEST QUADRANT	42

HOT MIX ASPHALT SUPERPAVE, 9.5MM FOR SURFACE, PG 76-22, LEVEL-3	
LOCATION	QUANTITY (TON)
NORTHWEST QUADRANT	0.7
SOUTHWEST QUADRANT	0.5

DETECTABLE WARNING SURFACE SHA STD. NO. MD-655.40	
LOCATION	QUANTITY (SF)
NORTHWEST QUADRANT	20
SOUTHWEST QUADRANT	20

MIX NO. 9 CONCRETE FOR SLOT BACKFILL	
LOCATION	QUANTITY (LF)
NORTHWEST QUADRANT	52
SOUTHWEST QUADRANT	42

5 INCH CONCRETE SIDEWALK	
LOCATION	QUANTITY (SF)
NORTHWEST QUADRANT	285
SOUTHWEST QUADRANT	185

GENERAL NOTES:

1. FOR 5 INCH CONCRETE SIDEWALK RECONSTRUCTION, SEE TYPICAL SECTION, THIS SHEET.
2. ALL DIMENSIONS ARE APPROXIMATE. CONTRACTOR TO VERIFY ALL DIMENSIONS IN THE FIELD.
3. NO DISTURBED AREA SHALL BE LEFT UNSTABILIZED OVERNIGHT UNLESS THE RUNOFF IS DIRECTED TO AN APPROVED SEDIMENT CONTROL DEVICE.
4. SIDEWALK RECONSTRUCTION LIMITS SHALL COINCIDE WITH CRACK CONTROL JOINTS (JOINTER GROOVES) OR EXPANSION JOINTS IN EXISTING SIDEWALK. NEW EXPANSION JOINTS SHALL BE PROVIDED AT THE INTERFACE OF EXISTING AND PROPOSED SIDEWALK. SEE SHA. STD. NO. MD-655.01.
5. INSTALL DETECTABLE WARNING SURFACE ON SIDEWALK RAMP AS PER SHA STD. NO. MD-655.40.
6. FORM NEW SIDEWALK AND EXPANSION JOINT MATERIAL AROUND EX. UTILITY POLES, MANHOLE COVERS, VALVE COVERS, AND FIRE HYDRANTS AS NECESSARY.
7. RESET ANY SIGNS DISTURBED BY THE CONSTRUCTION AS DIRECTED BY THE ENGINEER.
8. EXISTING INLETS SHALL NOT BE DAMAGED DURING CONSTRUCTION. DAMAGE TO THE INLETS WILL REQUIRE THE INLET TO BE REPLACED AT NO ADDITIONAL COST TO THE ADMINISTRATION.
9. EXISTING TREES, SHRUBS, AND THEIR RESPECTIVE ROOT SYSTEMS SHALL NOT BE DISTURBED DURING CONSTRUCTION.

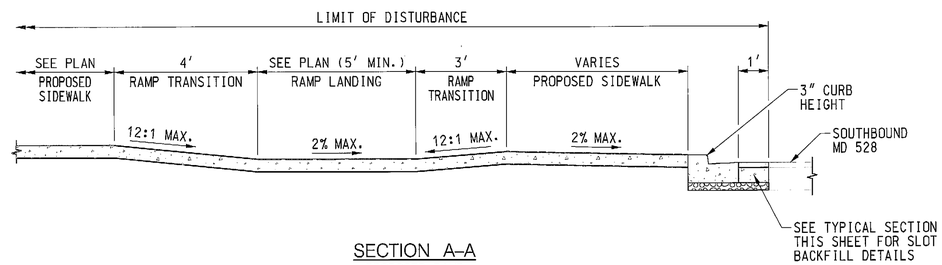

SECTION A–A

PROPOSED RAMP AND SIDEWALK
NOT TO SCALE

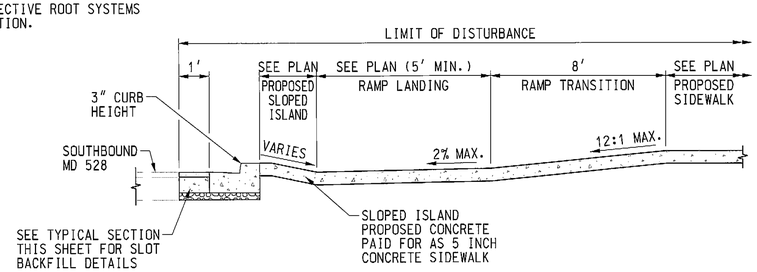

SECTION B–B

PROPOSED RAMP AND SIDEWALK
NOT TO SCALE

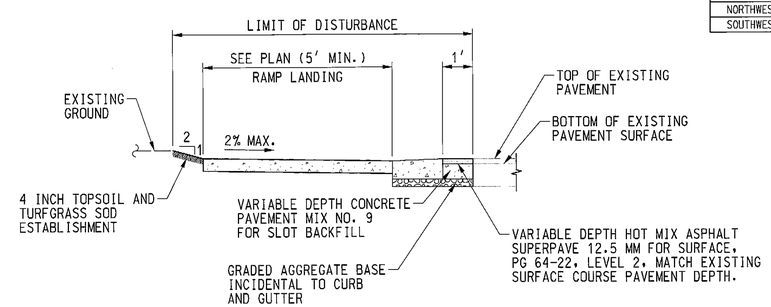

TYPICAL LANDING SECTION

PROPOSED SIDEWALK LANDING WITH DEPRESSED CURB REPLACEMENT AND SLOT BACKFILL
NOT TO SCALE

LEGEND

- CONCRETE PAVEMENT
- HMA PAVEMENT
- DETECTABLE WARNING SURFACE SHA STD. NO. MD-655.40

Alvi Associates, Inc.

CONSULTING ENGINEERS
BALTIMORE, MARYLAND

BY: Alvi Associates, Inc.

SHA

STATE OF MARYLAND
DEPARTMENT OF TRANSPORTATION
STATE HIGHWAY ADMINISTRATION

OFFICE OF TRAFFIC & SAFETY
TRAFFIC ENGINEERING DESIGN DIVISION

MD 528 (COASTAL HIGHWAY) AT 100th. ST.

OCEAN CITY, MD.

RAMP DETAILS

SCALE 1" = 5' DATE AUGUST 2012 CONTRACT NO. XX1285133

DESIGNED BY MRS COUNTY WORCESTER
DRAWN BY MJG LOGMILE
CHECKED BY HAS TIMS NO. L724
FAP NO. SEE TITLE SHEET TOD NO.

TS NO. 1296C-DE | DRAWING DE-1 OF 2 | SHEET NO. 23 OF 24

PLOTTED: Friday, July 27, 2012 AT 06:12 PM
FILE: s:\proj\hwy\ada compliance\drawings\ada-md-528\aai - plan\pDE-p0001_100th.dgn