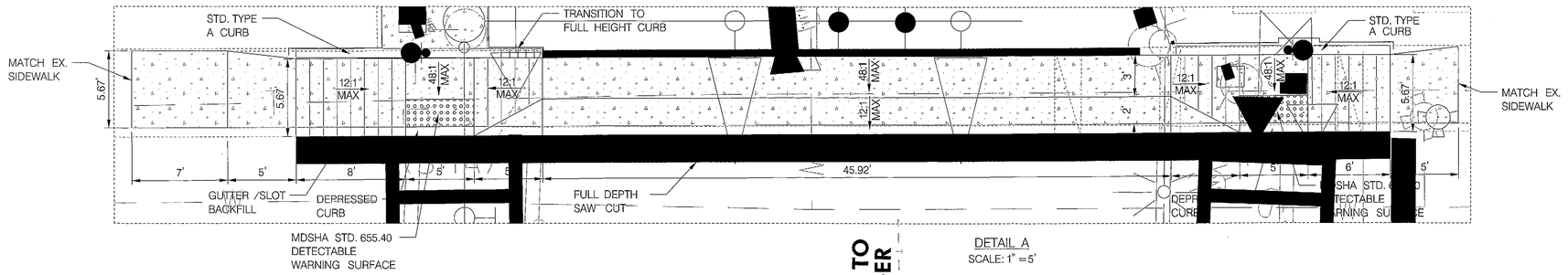

DETAIL A
SCALE: 1" =5'

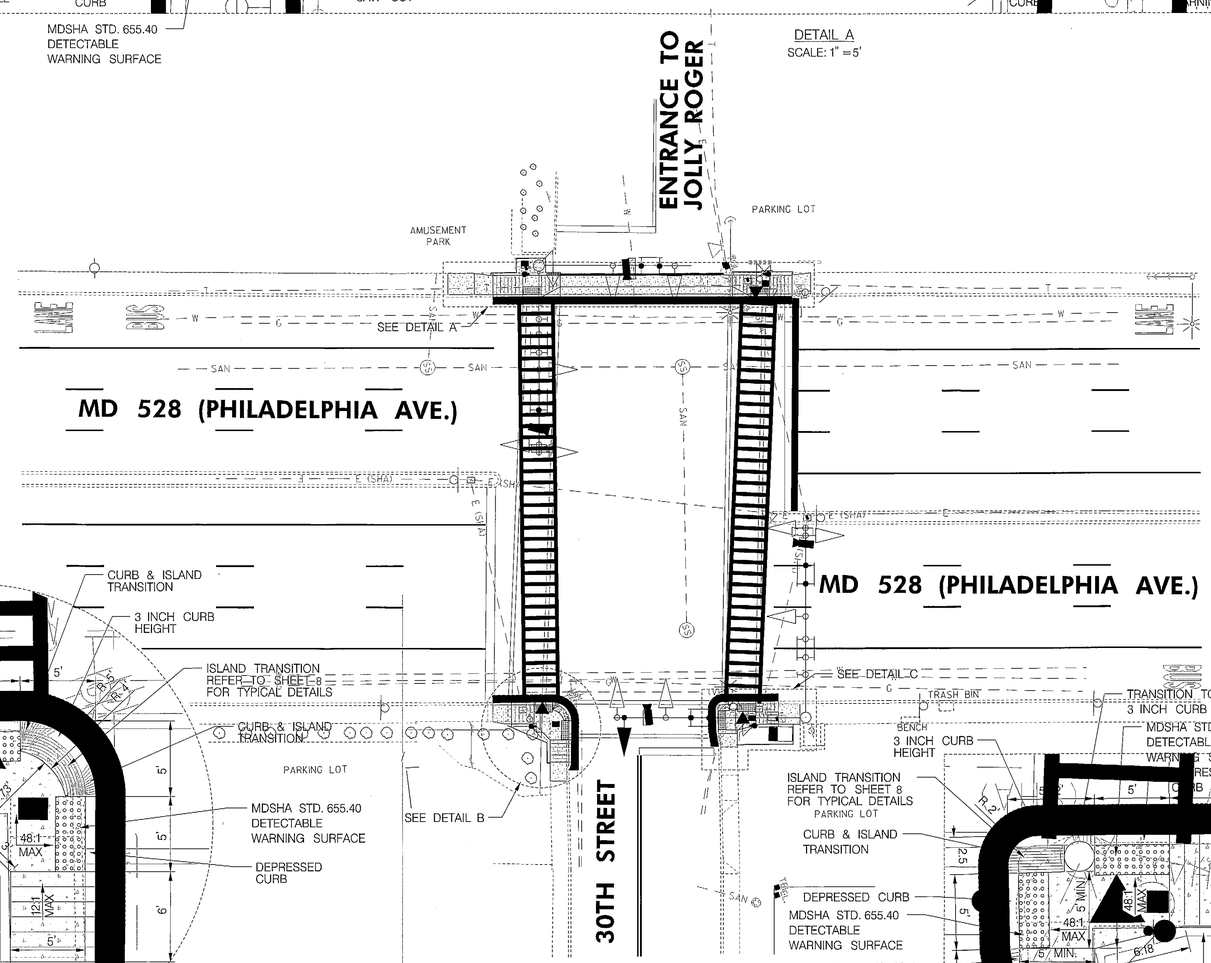

TOD NO: XX224-11
SHA NO: WO311A54/C54
MD 528 @30th Street/MD 528 @ Pacific Avenue

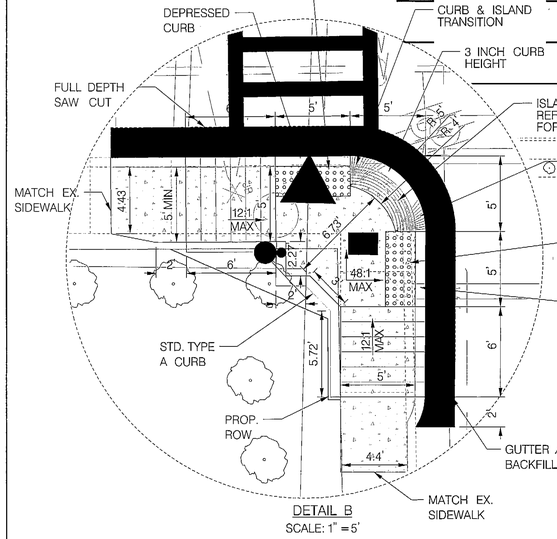

DETAIL B
SCALE: 1" =5'

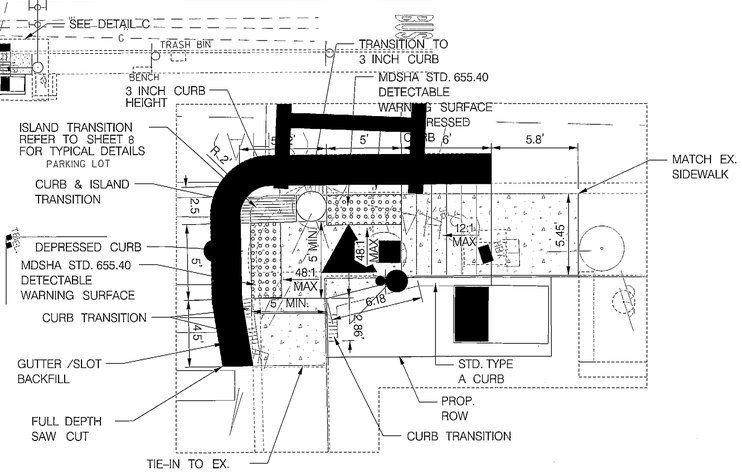

DETAIL C
SCALE: 1" =5'

QUANTITY NOTES

5 INCH CONCRETE SIDEWALK

DETAIL A	291 S.F.
DETAIL B	182 S.F.
DETAIL C	143 S.F.

MODIFIED TYPE A COMBINATION CURB AND GUTTER, 12 INCH GUTTERPAN, VARIABLE DEPTH

DETAIL A	80 L.F.
DETAIL B	34 L.F.
DETAIL C	28 L.F.

STD. TYPE A CURB

DETAIL A	34 L.F.
DETAIL B	18 L.F.
DETAIL C	13 L.F.

DETECTABLE WARNING SURFACE

DETAIL A	20 S.F.
DETAIL B	20 S.F.
DETAIL C	20 S.F.

8 INCH PORTLAND CEMENT CONCRETE FOR DRIVEWAY MIX 6

DETAIL A	28 S.Y.

GEOMETRIC LEGEND
- EXISTING
- PROPOSED

UTILITY LEGEND
- STORM DRAIN
- GAS MAIN
- WATER MAIN
- SEWER MAIN
- ELECTRIC CABLES
- AERIAL CABLES
- TELEPHONE CABLES
- FIBER-OPTIC

NOTES:

1. PUSHBUTTONS ARE TO BE LOCATED SO THAT THEY CAN BE ACTIVATED BY A PERSON IN A WHEELCHAIR REACHING LESS THAN 18" FROM A 60" X 60" LEVEL LANDING AREA WITH A CROSS SLOPE OF LESS THAN OR EQUAL TO 2%.

2. PAVEMENT IN FRONT OF ALL PROPOSED BUMP-OUTS SHALL BE SLOPED TO MAINTAIN POSITIVE DRAINAGE.

3. CURB DEPTH SHALL VARY TO MATCH EXISTING DEPTH.

ROADWAY LEGEND
- EXISTING GEOMETRICS
- PROPOSED GEOMETRICS
- FULL DEPTH SAW CUT
- FULL DEPTH RECONSTRUCTION
- PROPOSED CONCRETE SIDEWALK

RJM ENGINEERING, INC.
CONSULTING ENGINEERS
ELLICOTT CITY, MARYLAND

REVISIONS

PLOTTED: $DATE$
FILE: $FILE$

SHA
STATE OF MARYLAND
DEPARTMENT OF TRANSPORTATION
STATE HIGHWAY ADMINISTRATION
OFFICE OF TRAFFIC & SAFETY
TRAFFIC ENGINEERING DESIGN DIVISION

MD 528 (COASTAL HIGHWAY) AT 30TH STREET
OCEAN CITY, MARYLAND

RAMP DETAILS

SCALE 1" = 20' DATE JUNE 2011 CONTRACT NO. XX2245185

DESIGNED BY AG
DRAWN BY AG
CHECKED BY MA
FAP NO.
COUNTY WORCESTER
LOGMILE 23052806.22
TIMS NO. <TIMS NO>
TOD NO.

TS NO.2260C-DE | DRAWING DE-1 OF 3 | SHEET NO. 3 OF 8

BY: $USERNAME$