MD 528 IS ASSUMED TO RUN IN A NORTH-SOUTH DIRECTION.

EXISTING SIGNS TO REMAIN

17,19,21,23 — RIGHT LANE / BUSES AND RIGHT TURNS ONLY — R3-17(MOD) 30"X42"

18,20,22 — R3-1(L) 24" x 24"

24,25 — Coastal HWY — D3-2 VARIABLE x 16" (SIGN 25 IS DUAL FACED)

EXISTING SIGNS TO BE REMOVED

16 — LEFT TURN YIELD ON GREEN — R 10-12 36"X42"

PROPOSED AUDIBLE PUSHBUTTON AND SIGN

26, 27, 28 — R10-4(1) 9"x12"

EXISTING SIGNALS TO REMAIN

1: 12" R, 12" YY, 12" G; 8", 8", 8"

2: R, YY, G; 12"

3-13: R, Y, G; 12"

EXISTING SIGNALS TO BE REMOVED

14,15 — 12"

PROPOSED SIGNALS (BLACK FACED)

14-15 — 16" LED WITH COUNTDOWN

NEMA PHASING

Ø1 — OLA 1+3+4

Ø2

Ø3 Advance PED — 3+4 PED, OLA 1+3+4

Ø4 — 3+4 PED, 1+3+4

FLASHING OPERATION

PHASING NOTES:

1. PHASES ASSOCIATED BY A SOLID LINE WILL NOT OPERATE CONCURRENTLY.
2. PHASES ASSOCIATED BY A DASHED LINE WILL OPERATE CONCURRENTLY.

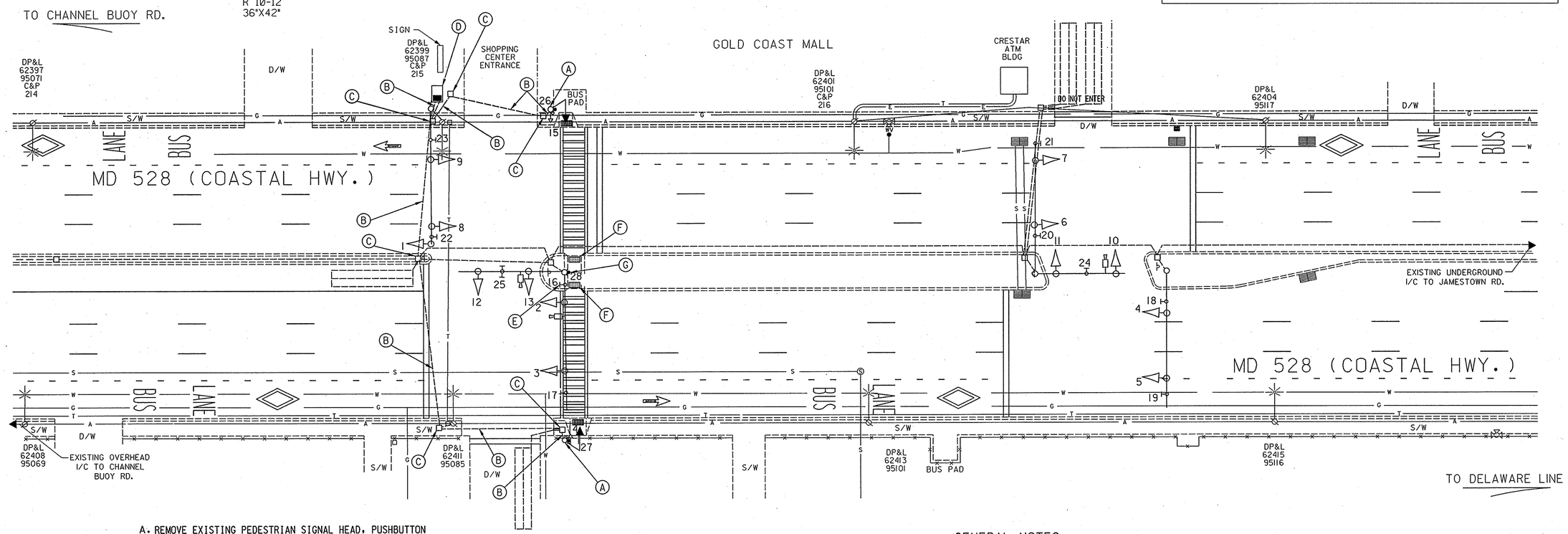

A. REMOVE EXISTING PEDESTRIAN SIGNAL HEAD, PUSHBUTTON AND SIGN; INSTALL COUNTDOWN PEDESTRIAN SIGNAL HEAD (PEDESTAL POLE MOUNTED); INSTALL APS PEDESTRIAN PUSHBUTTON AND SIGNS (ORIENTED PARALLEL WITH THE EXISTING CROSSWALK); PLUG UNUSED HOLES IN THE EXISTING POLE.

B. USE EXISTING CONDUIT.

C. USE EXISTING HANDHOLE.

D. USE EXISTING CONTROLLER AND CABINET.

E. REMOVE EXISTING SIGN.

F. INSTALL DETECTABLE WARNING SURFACE (BLACK)

G. INSTALL APS PEDESTRIAN PUSHBUTTON AND SIGNS ON THE EXISTING TRAFFIC SIGNAL POLES (ORIENTED PARALLEL WITH THE EXISTING CROSSWALK).

GENERAL NOTES

1. UNDERGROUND UTILITIES SHOWN ON THESE PLANS ARE SCHEMATIC ONLY AND MAY NOT BE COMPLETE. THE CONTRACTOR SHALL BE RESPONSIBLE FOR NOTIFYING "MISS UTILITY" PRIOR TO CONSTRUCTION SO THAT ALL UTILITIES MAY BE LOCATED IN THE FIELD. IF THE CONTRACTOR PERCEIVES THAT A CONFLICT BETWEEN THE UTILITIES AND THE TRAFFIC SIGNAL WILL OCCUR, THE CONTRACTOR SHALL NOTIFY THE PROJECT ENGINEER IMMEDIATELY SO THAT THE CONFLICT MAY BE RESOLVED.
2. ACCESSIBLE PEDESTRIAN CONTROL EQUIPMENT SHALL BE DELIVERED TO THE SHA SIGNAL SHOP FOR TESTING AND PROGRAMMING PRIOR TO INSTALLATION. CONTACT MR. EDWARD RODENHIZER TO COORDINATE AT 410-787-7652.
3. UNUSED ELECTRICAL CABLES SHALL BE REMOVED AND DISPOSED.

TOD No: AT355-20
SHA: WO421A58/ B58
Worcester Co.

STATE OF MARYLAND
DEPARTMENT OF TRANSPORTATION
STATE HIGHWAY ADMINISTRATION
OFFICE OF TRAFFIC & SAFETY
TRAFFIC ENGINEERING DESIGN DIVISION

MD 528 (COASTAL HWY.) AND GOLD COAST MALL
OCEAN CITY, MARYLAND

TRAFFIC SIGNAL PLAN

LEGEND OF UNDERGROUND AND OVERHEAD UTILITIES

AERIAL CABLE	A	A
ELECTRIC	E	E
TELEPHONE	T	T
GAS	G	G
SEWER	S	S
WATER	W	W
CABLE TV	TV	TV

RUMMEL, KLEPPER & KAHL, LLP
CONSULTING ENGINEERS
81 MOSHER STREET
BALTIMORE, MARYLAND 21217
TELE:(410)728-2900 FAX:(410)383-3270

APPROVALS: TEAM LEADER, ASST. DIV. CHIEF, DIVISION CHIEF, OFFICE DIRECTOR — ORIGINAL ON FILE

REVISIONS

C	INSTALL COUNTDOWN PED SIGNALS WITH APS PUSHBUTTONS AND SIGNS SHA NO.: AT355185 — 1-31-06
B	INSTALL VIDEO DETECTION SHA NO.: WO3145177 — 6-14-05
D	REBUILD EXISTING TRAFFIC SIGNALS SHA NO.: XX1005185 TIMS: C419 — 12-30-99

RRZ	DBD	MAR	DAZ		TH

SCALE 1" = 20' DATE 5-1-81 CONTRACT NO.

DESIGNED BY H. KILIAN COUNTY WORCESTER
DRAWN BY LOGMILE 2352802.19
CHECKED BY TIMS NO. H292
FAP NO. TOD NO.

TS NO. 1823E DRAWING – OF SHEET NO. 13 OF 18