NOTE:
MD 528 IS ASSUMED TO RUN IN A NORTH-SOUTH DIRECTION.

CONSTRUCTION DETAILS

A. INSTALL 27' STEEL POLE WITH A 38' MAST ARM, TRAFFIC SIGNAL HEADS, PEDESTRIAN SIGNAL HEADS, SIGNS, PUSHBUTTON AND PEDESTRIAN EDUCATION SIGN AS SHOWN. (NOTE: 1-3", 90° POLYVINYL CHLORIDE (SCHEDULE 80) BEND.) (NOTE: POLE MUST BE CUT TO 21' HEIGHT AND CLEANED, GALVANIZED AND CAPPED.)

B. INSTALL 27' STEEL POLE WITH A 60' MAST ARM, TRAFFIC SIGNAL HEADS, SIGNS, PEDESTRIAN SIGNAL HEADS, PUSHBUTTON AND PEDESTRIAN EDUCATION SIGN AS SHOWN. (NOTE: 1-3", 90° POLYVINYL CHLORIDE (SCHEDULE 80) BEND.) (NOTE: POLE MUST BE CUT TO 21' HEIGHT, CLEANED, GALVANIZED AND CAPPED.)

C. INSTALL 27' STEEL POLE WITH TWIN-50'-60' MAST ARMS, TRAFFIC SIGNAL HEADS, SIGNS, PEDESTRIAN SIGNAL HEADS, PUSHBUTTON, PEDESTRIAN EDUCATION SIGN, 1-2" WEATHERHEAD, SERVICE CONTROL AND DISTRIBUTION EQUIPMENT. (NOTE: 1-2", 90° POLYVINYL CHLORIDE (SCHEDULE 80) BEND AND 1-3", 90° POLYVINYL CHLORIDE (SCHEDULE 80) BEND.) (NOTE: POLE MUST BE CUT TO 21' HEIGHT, CLEANED, GALVANIZED AND CAPPED.)

D. INSTALL 10' BREAKAWAY PEDESTAL POLE, PEDESTRIAN SIGNAL HEADS, PUSHBUTTON AND PEDESTRIAN EDUCATION SIGN AS SHOWN. (NOTE: 1-3", 90° POLYVINYL CHLORIDE (SCHEDULE 80) BEND.)

E. INSTALL NEMA SIZE "6" BASE-MOUNTED CABINET AND CONTROLLER WITH ALL NECESSARY EQUIPMENT AS SHOWN. (NOTE: 2-2", 90° POLYVINYL CHLORIDE (SCHEDULE 80) BEND AND 2-4", 90° POLYVINYL CHLORIDE (SCHEDULE 80) BENDS.)

F. INSTALL HANDHOLE (FRAME AND COVER) FOR TRAFFIC SIGNAL EQUIPMENT.

G. INSTALL 6' X 30' LOOP DETECTOR ENCASED IN ¼" FLEXIBLE TUBING QUADRUPOLE TYPE (3-6-3).

H. INSTALL 1" LIQUID TIGHT FLEXIBLE NON-METALLIC ELECTRICAL CONDUIT (DETECTOR WIRE SLEEVE).

J. INSTALL 4" POLYVINYL CHLORIDE ELECTRICAL CONDUIT (SCHEDULE 80) (SLOTTED).

K. INSTALL 3" POLYVINYL CHLORIDE ELECTRICAL CONDUIT (SCHEDULE 80) (TRENCHED).

L. INSTALL 4" POLYVINYL CHLORIDE ELECTRICAL CONDUIT (SCHEDULE 80) (TRENCHED).

M. INSTALL 2" POLYVINYL CHLORIDE ELECTRICAL CONDUIT (SCHEDULE 80) (TRENCHED).

N. INSTALL PAVEMENT MARKING AS SHOWN. SEE SHEET SD-04 FOR LOCATION OF PATTERNED ASPHALT CROSSWALKS [2]

O. USE NEW HANDHOLE INSTALLED BY LIGHTING CONTRACTOR.

P. PROPOSED OVERHEAD ELECTRICAL SERVICE TO BE INSTALLED BY CONNECTIV POWER.

Q. EXISTING OVERHEAD INTERCONNECT CABLE TO BE REMOVED AND REPLACED. (SEE WIRING DIAGRAM)

R. INSTALL 1-2" POLYVINYL CHLORIDE (SCHEDULE 40) RISER, 1-2" WEATHERHEAD AND 1-3", 90° POLYVINYL CHLORIDE (SCHEDULE 80) BEND ONTO EXISTING UTILITY POLE FOR INTERCONNECT AS SHOWN.

PHASING CHART

	1	2	3	4	5	6	7	8	9	10	11	12	13	14	15	16	17	18	19	20
	R Y G	R Y G	R Y G	R Y G	R Y G	R Y G	R Y G	R Y G	R Y G	R Y G	R Y G	R Y G	DW WK	DW WK	DW WK	DW WK	DW WK	DW WK	DW WK	DW WK
PHASE 1 & 5	G	G	R	G	G	R	R	R	R	R	R	R	DW	DW	DW	DW	DW	DW	DW	DW
1 & 5 CHANGE	TO PHASE 1 & 6 OR PHASE 2 & 5												DW	DW	DW	DW	DW	DW	DW	DW
PHASE 1 & 6	G	G	G	R	R	R	R	R	R	R	R	R	DW	DW	DW	DW	DW	DW	DW	DW
1 CHANGE	Y	Y	G	R	R	R	R	R	R	R	R	R	DW	DW	DW	DW	DW	DW	DW	DW
PHASE 2 & 5	R	R	R	G	G	G	R	R	R	R	R	R	DW	DW	DW	DW	DW	DW	DW	DW
5 CHANGE	R	R	R	Y	Y	G	R	R	R	R	R	R	DW	DW	DW	DW	DW	DW	DW	DW
PHASE 2 & 6	G	G	G	G	G	G	R	R	R	R	R	R	WK	WK	WK	WK	DW	DW	DW	DW
PED CLEARANCE	G	G	G	G	G	G	R	R	R	R	R	R	FL/DW	FL/DW	FL/DW	FL/DW	DW	DW	DW	DW
2 & 6 CHANGE	Y	Y	Y	Y	Y	Y	R	R	R	R	R	R	DW	DW	DW	DW	DW	DW	DW	DW
PHASE 4 & 8	R	R	R	R	R	R	G	G	G	G	G	G	DW	DW	DW	DW	DW	DW	DW	DW
4 & 8 CHANGE	R	R	R	R	R	R	Y	Y	Y	Y	Y	Y	DW	DW	DW	DW	DW	DW	DW	DW
PHASE 4 & 8 ALT	R	R	R	R	R	R	G	G	G	G	G	G	DW	DW	DW	DW	WK	WK	WK	WK
PED CLEARANCE	R	R	R	R	R	R	G	G	G	G	G	G	DW	DW	DW	DW	FL/DW	FL/DW	FL/DW	FL/DW
4 & 8 ALT CHANGE	R	R	R	R	R	R	Y	Y	Y	Y	Y	Y	DW	DW	DW	DW	DW	DW	DW	DW
FLASHING OPERATION	FL/Y	FL/Y	FL/Y	FL/Y	FL/Y	FL/Y	FL/R	FL/R	FL/R	FL/R	FL/R	FL/R	DARK	DARK	DARK	DARK	DARK	DARK	DARK	DARK

WIRING KEY

A, B, C, D, E, F	2-CONDUCTOR ELECTRICAL CABLE (NO. 14 A.W.G.) (ALUMINUM SHIELDED)
G, H, I, J	2-CONDUCTOR ELECTRICAL CABLE (NO. 14 A.W.G.)
K, L, M, N, O, P, Q, R	5-CONDUCTOR ELECTRICAL CABLE (NO. 14 A.W.G.)
S, T, U, V, AA, BB, CC, DD	7-CONDUCTOR ELECTRICAL CABLE (NO. 14 A.W.G.)
W -	3-WIRE ELECTRICAL CABLE (NO. 4 A.W.G.)
X, Y	12-PAIR, VOICE-GRADE INTERCONNECT CABLE (NO 19 AWG) (SELF-SUPPORTING)
CC -	STRANDED BARE COPPER GROUND WIRE (NO. 4 A.W.G.)
LW -	LOOP WIRE (NO. 14 A.W.G.)
PS -	PROPOSED OVERHEAD SERVICE TO BE INSTALLED BY CONNECTIV
✚ -	GROUND ROD

WIRING DIAGRAM

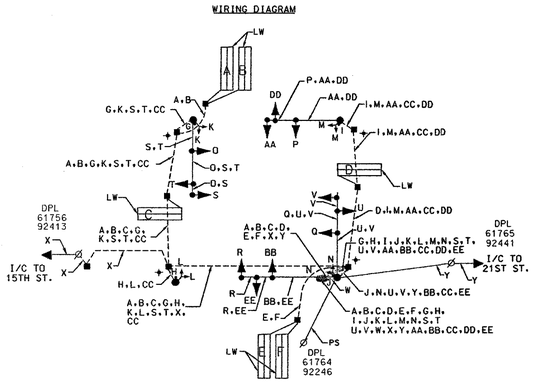

PROPOSED SIGNS

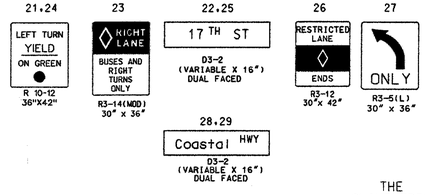

PROPOSED SIGNALS
(BLACK FACED)

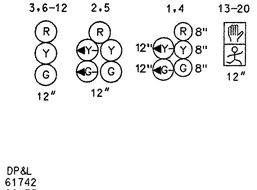

NEMA PHASING

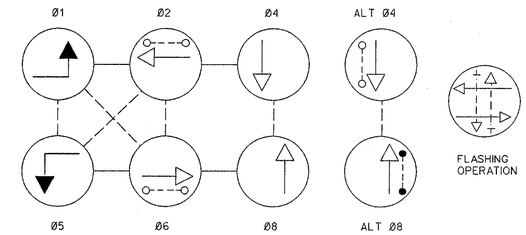

PHASING NOTES:
1. PHASES ASSOCIATED BY A SOLID LINE WILL NOT OPERATE CONCURRENTLY.
2. PHASES ASSOCIATED BY A DASHED LINE WILL OPERATE CONCURRENTLY.

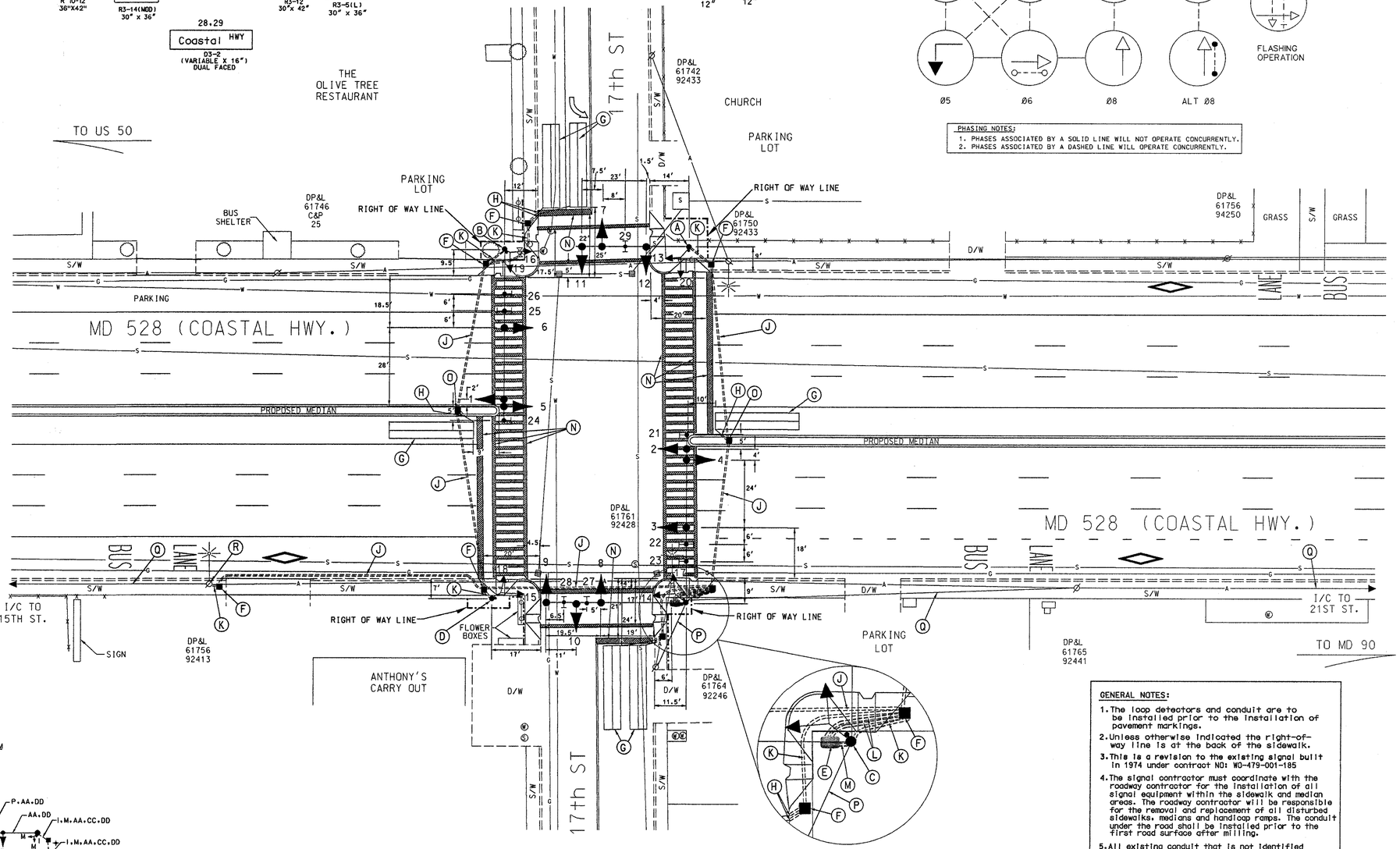

GENERAL NOTES:

1. The loop detectors and conduit are to be installed prior to the installation of pavement markings.
2. Unless otherwise indicated the right-of-way line is at the back of the sidewalk.
3. This is a revision to the existing signal built in 1974 under contract NO: WO-479-001-185
4. The signal contractor must coordinate with the roadway contractor for the installation of all signal equipment within the sidewalk and median areas. The roadway contractor will be responsible for the removal and replacement of all disturbed sidewalks, medians and handicap ramps. The conduit under the road shall be installed prior to the first road surface after milling.
5. All existing conduit that is not identified shall be capped and abandoned (See removal sheet.)

REVISION - [1] 9/25/00
NEW SHEET

GEOMETRIC LEGEND
PROPOSED
EXISTING

LEGEND OF UNDERGROUND AND OVERHEAD UTILITIES
AERIAL CABLE —A—A—
ELECTRIC —E—E—
TELEPHONE —T—T—
GAS —G—G—
SEWER —S—S—
WATER —W—W—
CABLE TV —TV—TV—

STREET TRAFFIC STUDIES, LTD.
400 Crain Hwy. N.W.
Glen Burnie, MD 21061
Ph (410) 590-5500
Fax (410) 590-6637

REVISIONS	
[2] REDLINE NO. 2	11 / /00
(A) RECONSTRUCT SIGNAL USING MAST ARMS S.H.A. NO. WO7005184	4-28-00

APPROVALS
ASST. CHIEF TEOD SECTION
ASST. DISTRICT ENGINEER, TRAFFIC
CHIEF, TRAFFIC ENGINEERING DESIGN DIVISION
DIRECTOR, TRAFFIC & SAFETY
ORIGINAL ON FILE

MARYLAND DOT - STATE HIGHWAY ADMINISTRATION
Office of Traffic & Safety
TRAFFIC ENGINEERING DESIGN DIVISION
MD 528 (COASTAL HWY) AND 17th ST

DRAWN BY: WM MUNK	COUNTY: WORCESTER	TS NO. 361A	SHEET NO. 55A OF 89
CHECK BY:	LOG MILE: 23052807.44		
DATE: 2-10-95	F.A.P. NO.	T.I.M.S. NO.	
SCALE: 1"= 20'	S.H.A. NO. WO-479-001-185		