PROJECT DESCRIPTION

GENERAL

THIS PROJECT INVOLVES THE INSTALLATION OF THE NEW TRAFFIC CONTROL SIGNAL AT THE INTERSECTION OF MD 378 (BALTIMORE AVENUE) AND 12th STREET IN WORCESTER COUNTY, MARYLAND. MD 378 IS ASSUMED TO RUN IN A NORTH-SOUTH DIRECTION.

INTERSECTION OPERATION

THE INTERSECTION WILL OPERATE IN A NEMA THREE-PHASE, SEMI-ACTUATED MODE WITH THE MD 378 APPROACH OPERATING ALONE AND THE 12th STREET APPROACHES OPERATING CONCURRENTLY.

AN ALTERNATE PEDESTRIAN PHASE WILL BE PROVIDED ACROSS THE SOUTH LEG OF MD 378 AND PEDESTRIAN INDICATIONS WILL BE PROVIDED ALONG MD 378.

CONTROLLER REQUIREMENTS

INSTALL A FULL-TRAFFIC-ACTUATED, EIGHT-PHASE CONTROLLER WITH SYSTEM PACKAGE AND ASSOCIATED HARNESSES HOUSED IN A NEMA SIZE "5" POLE MOUNTED CABINET.

MAINTENANCE OF TRAFFIC

THE FOLLOWING TRAFFIC CONTROL STANDARDS SHALL BE REFERENCED FOR THE PROJECT. ADDITIONAL TRAFFIC CONTROL STANDARDS MAYBE USED AS DIRECTED BY THE ENGINEER.

STANDARD NO. MD-104.04-01 (SHOULDER WORK)

STANDARD NO. MD-104.04-03 (LEFT LANE CLOSURE)

STANDARD NO. MD-104.04-05 (RIGHT LANE CLOSURE)

PROJECT CONTACTS

THE CONTACT PERSONS FOR SHA ARE AS FOLLOWS:

MR. GENE COFIELL
ASSISTANT DISTRICT ENGINEER - TRAFFIC
PHONE: (410) 677-4040

MR. JAMES R. WRIGHT
ASSISTANT DISTRICT ENGINEER - MAINTENANCE
PHONE: (410) 677-4010

MR. BRUCE W. POOLE
DISTRICT UTILITY ENGINEER
PHONE: (410) 677-4082

MR. RICHARD L. DAFF, SR.
CHIEF, TRAFFIC OPERATIONS DIVISION
PHONE: (410) 787-7630

EQUIPMENT LIST "A"

A. EQUIPMENT TO BE SUPPLIED BY THE SHA

ITEM NO.	QUANTITY	DESCRIPTION
9044	1 EACH	EIGHT-PHASE, FULL-TRAFFIC-ACTUATED CONTROLLER WITH INTERSECTION MONITOR HOUSED IN A NEMA SIZE "5" POLE MOUNTED CABINET
9571	49 S.F.	SHEET ALUMINUM SIGNS TO CONSIST OF :
	- 1 EACH	R3-1 SIGN (30 IN. x 30 IN.) - MAST ARM MOUNT
	- 1 EACH	R3-3 SIGN (30 IN. x 30 IN.) - MAST ARM MOUNT
	- 1 EACH	D-3(1) SIGN (VARIABLE x 16 IN.) DUAL FACED - MAST ARM MOUNT
	- 2 EACH	D-3(1) SIGN (VARIABLE x 16 IN.) - POLE MOUNT
	- 2 EACH	R10-3(1) SIGN (9 IN. x 15 IN.) TO READ "PUSHBUTTON TO CROSS BALTIMORE AVENUE"

EQUIPMENT LIST "C"

NO EQUIPMENT TO BE REMOVED AND RETURNED TO SHA

PHASE CHART

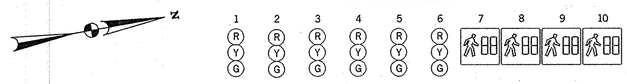

PHASE 2 + 6	G	G	R	R	R	R	DW	DW	WK	WK
PED CLEARANCE	Y	Y	R	R	R	R	DW	DW	FL/DW	FL/DW
2 + 6 CHANGE	Y	Y	R	R	R	R	DW	DW	DW	DW
PHASE 4 + 8	R	R	G	G	G	G	DW	DW	DW	DW
4 + 8 CHANGE	R	R	Y	Y	Y	Y	DW	DW	DW	DW
PHASE 4 + 8 ALT	R	R	G	G	G	G	WK	WK	DW	DW
PED CLEARANCE	R	R	G	G	G	G	FL/DW	FL/DW	DW	DW
4 + 8 ALT CHANGE	R	R	Y	Y	Y	Y	DW	DW	DW	DW
FLASHING OPERATION	FL/Y	FL/Y	FL/R	FL/R	FL/R	FL/R	DARK	DARK	DARK	DARK

EQUIPMENT LIST "B"

B. EQUIPMENT TO BE FURNISHED AND/OR INSTALLED BY THE CONTRACTOR

ITEM NO.	QUANTITY	DESCRIPTION
1001	2 EACH	MAINTENANCE OF TRAFFIC
2001	3 C.Y.	CLASS 2 EXCAVATION
2002	3 C.Y.	TEST PIT EXCAVATION
5005	25 L.F.	24 INCH HEAT APPLIED WHITE PERMANENT PREFORMED THERMOPLASTIC PAVEMENT MARKINGS
6001	15 L.F.	STARNDARD TYPE A COMBINATION CURB AND GUTTER PAN 8 IN. DEPTH
6002	70 S.F.	4 INCH CONCRETE SIDEWALK
8001	18 EACH	12 INCH LED SIGNAL HEAD SECTION (R, Y, G)
8002	1 EACH	2-WIRE CENTRAL CONTROL UNIT
8004	3 EACH	8 INCH LED SIGNAL HEAD SECTION
8008	2 EACH	AUDIBLE/TACTILE PEDESTRIAN PUSHBUTTON
8009	1 EACH	BREAKAWAY PEDESTAL POLE (ANY SIZE)
8014	4 EACH	LED 16 INCH COUNTDOWN PEDESTRIAN SIGNAL HEAD
8017	1 EACH	MAST ARM POLE AND 60 FT. MAST ARM
8022	1 EACH	REMOVE AND DISPOSE OF EXISTING MATERIAL AND EQUIPMENT
8029	935 L.F.	12-PAIR COMMUNICATION CABLE, SELF-SUPPORTING (OVERHEAD)
8031	150 L.F.	DISCONNECT, PULL-BACK & REROUTE CABLES
8033	35 L.F.	SCHEDULE 80 RIGID PVC CONDUIT (UP TO 4 INCHED) - SLOTTED
8034	35 L.F.	SCHEDULE 80 RIGID PVC CONDUIT (UP TO 4 INCHED) - TRENCHED
8038	49 S.F.	INSTALL OVERHEAD OR GROUND MOUNTED SIGN
8040	95 L.F.	NO. 6 A.W.G. STRANDED BARE COPPER GROUND WIRE
8041	1 EACH	WEATHERHEAD, 3 INCH
8043	1 EACH	ELECTRICAL UTILITY SERVICE EQUIPMENT 120/240 VOLTS 60 AMPS
8044	45 L.F.	ELECTRICAL CABLE - 1 CONDUCTOR NO. 4 A.W.G - THHN/THWN
8046	2 EACH	FURNISH AND INSTALL ELECTRICAL HANDHOLE
8051	2 EACH	CUT, CLEAN, GALVANIZE AND CAP TRAFFIC SIGNAL STRUCTURE
8055	300 L.F.	ELECTRICAL CABLE - 5 CONDUCTOR (NO. 14 A.W.G)
8056	200 L.F.	ELECTRICAL CABLE - 7 CONDUCTOR (NO. 14 A.W.G)
8063	1 EACH	INSTALL CONTROLLER AND CABINET - POLE MOUNT

WIRING DIAGRAM

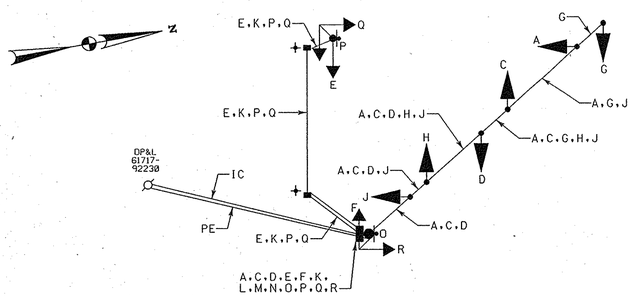

WIRING KEY

- A, C, D — 7-CONDUCTOR ELECTRICAL CABLE (NO. 14 A.W.G.)
- E, F, G, H, J, Q, R — 5-CONDUCTOR ELECTRICAL CABLE (NO. 14 A.W.G.)
- K — STRANDED BARE COPPER GROUND WIRE (NO. 6 A.W.G.)
- L, M, N — 1-CONDUCTOR ELECTRICAL CABLE (NO. 4 A.W.G.)
- O, P — 2-CONDUCTOR ELECTRICAL CABLE (NO. 14 A.W.G.)
- IC - EXISTING OVERHEAD INTECONNECT CABLE
- PE - PROPOSED OVERHEAD ELECTRICAL SERVICE
- ⏚ - 3/4 IN. X 10 FT. GROUND ROD

DIMENSION DIAGRAM

SCALE: 1"=10'

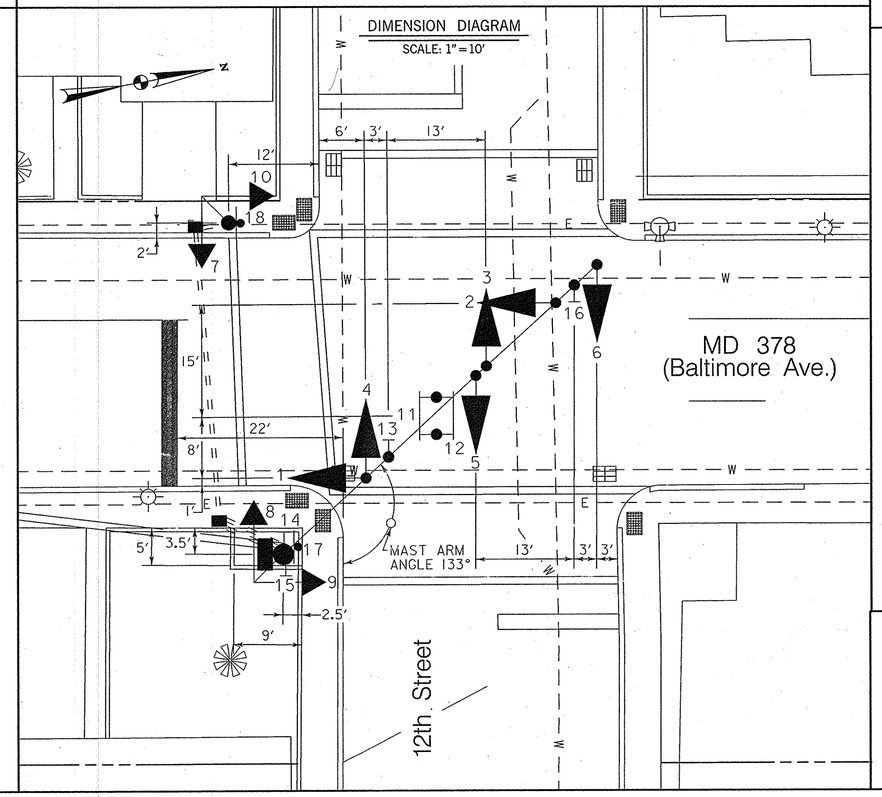

MODIFIED PEDESTAL POLE FOUNDATION

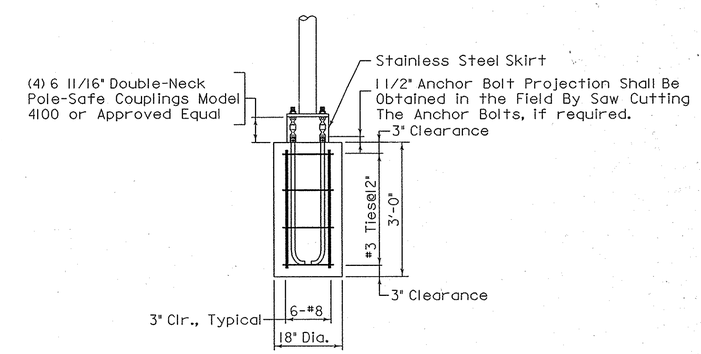

TOD No.: AT909-10
SHA No.: WO442A51/C51
MD 378 @ 12th Street

STATE OF MARYLAND
DEPARTMENT OF TRANSPORTATION
STATE HIGHWAY ADMINISTRATION

OFFICE OF TRAFFIC & SAFETY
TRAFFIC ENGINEERING DESIGN DIVISION

MD 378 (Baltimore Avenue) and 12th Street

Ocean City, Maryland

WR&A
Whitman, Requardt and Associates, LLP
801 South Caroline Street
Baltimore, Maryland 21231
(410) 235-3450

GENERAL INFORMATION SHEET

SCALE	NONE	DATE	10/10/2006
CONTRACT NO.	AT9095185		
DESIGNED BY	S. BLOSS	COUNTY	WORCESTER
DRAWN BY	S. BLOSS	LOGMILE	23038701.19
CHECKED BY	N. LEARY	TIMS NO.	H593
FAP NO.	AC-STPG-000A(175)E	TOD NO.	
TS NO. 4481	DRAWING - OF	SHEET NO.	3 OF 3

PLOTTED: 10/19/2006
FILE: n:\21556-002\cadd\pSG-N003_h593.dgn

BY: sbloss