EXISTING SIGNALS

1,2,5,6,8-10 — R, Y, G
3,4 — R, Y, G
7 — R, Y, G

EXISTING SIGNS

14a,14b — Great Mills RD — D-3(2) (Var. X12")
15,16 — ONLY — R3-5 (30"X36")
18 — R3-1 (30"X30")
19 — Lexington Park / Naval Air Sta — D1-1(2) (72"X24")

20.~~32~~,34,38,~~34~~ — OM1-1 (18"X18") REMOVE
21,~~30~~ — WILD — R1-2 (36"X36"X36") REMOVE
22 — EAST MARYLAND 246 — ASSOCIATED SHIELD ASSEMBLY (30"X51")
23 — R4-7 (24"X30")
24,27,35 — DO NOT ENTER — R5-1 (30"X30")
25 — SPEED LIMIT 50 — R2-1 (24"X30")
26 — R4-7 (24"X30") R3-1 (30"X30")
~~24~~,29 — EAST MARYLAND 246 — ASSOCIATED SHIELD ASSEMBLY (30"X51")

30 — SOUTH MARYLAND 5 — M3-3 (24"X12") M1-5 (30'x24")
31 — SPEED LIMIT 40 — R2-1 (24"X30")
36 — EAST MARYLAND 246 — M3-2 (24"X12") M1-5 (30'x24")
37 — STATE LAW ALL VEHICLES MUST STOP FOR SCHOOL BUS WHEN RED LIGHT IS FLASHING — S95-2 (72"X72")
40 — NORTH MARYLAND 5 / SOUTH MARYLAND 5 — ASSOCIATED SHIELD ASSEMBLY (24"X51") ASSOCIATED SHIELD ASSEMBLY (24"X51")
43 — STOP — R1-1 (30"X30")

MD 5 IS ASSUMED TO RUN IN A NORTH/SOUTH DIRECTION

PROPOSED SIGNALS

11-13 — RD, YD, GD

PROPOSED SIGNS

17 — Point Lookout RD — D-3(2) (Var."X12")
33 — R4-7 (24"X30")
42 — OM1-1 (18"X18")
17A — R3-4 30"x30"
28 — NO TURN ON RED — R10-11B 30"x30"

NEMA PHASING

Ø1+Ø4, Ø2, Ø3, Ø6, Ø4

FLASHING OPERATION

FIREHOUSE PRE-EMPTION

PHASES ASSOCIATED BY A DASHED LINE WILL OPERATE CONCURRENTLY
PHASES ASSOCIATED BY A SOLID LINE WILL NOT OPERATE CONCURRENTLY

CONSTRUCTION NOTES:

Ⓐ INSTALL MAST ARM POLE 27',38' MAST ARM, SIGNALS AND SIGN AS SHOWN.
Ⓑ INSTALL 15 FOOT LIGHTING BRACKET ARM, 250 WATT HPS LUMINARIE WITH PHOTOCELL.
Ⓒ INSTALL NEW HANDHOLE.
Ⓓ INSTALL 2" POLYVINYL CHLORIDE ELECTRICAL CONDUIT-TRENCHED.
Ⓔ INSTALL 3" POLYVINYL CHLORIDE ELECTRICAL CONDUIT-BORED.
Ⓕ INSTALL NEW HANDHOLE TO INTERCEPT EXISTING CONDUIT.
Ⓖ INSTALL 6'X30' LOOP DETECTOR ENCASED IN FLEXIBLE TUBING QUADRUPLE TYPE (3-6-3).
Ⓗ INSTALL MICROLOOP PROBE DETECTOR.
Ⓘ INSTALL 1" LIQUID TIGHT FLEXIBLE NON-METALIC CONDUIT FOR LOOP DETECTOR LEAD-IN.
Ⓙ REMOVE EXISTING HANDHOLE.
Ⓚ ABANDON EXISTING HANDHOLE.
Ⓛ ABANDON EXISTING CONDUIT.
Ⓜ INSTALL 24" HEAT APPLIED PERMANENT PREFORMED THERMOPLASTIC PAVEMENT MARKING.
Ⓝ INSTALL 10" WHITE SKIP THERMOPLASTIC PAVEMENT MARKING (3-9-3).
Ⓞ INSTALL 5" WHITE SKIP THERMOPLASTIC PAVEMENT MARKING (10-30-10).
Ⓟ INSTALL 10" WHITE SOLID THERMOPLASTIC PAVEMENT MARKING.
Ⓠ REMOVE EXISTING PAVEMENT MARKING.
Ⓡ PULL EXISTING CONTROL CABLES BACK TO HANDHOLE LABELED "a". REINSTALL CONTROL CABLES WITH NEW CABLES TO APPROPRIATE EQUIPMENT.
Ⓢ INSTALL HEAT APPLIED PERMANENT PREFORMED THERMOPLASTIC PAVEMENT MARKING ARROW.
Ⓣ REMOVE EXISTING SHEET ALUMINUM SIGN AND SUPPORT.
Ⓤ INSTALL SHEET ALUMINUM SIGN ON A NEW 4"X4" WOOD SUPPORT.
Ⓥ INSTALL POLE MOUNTED SIGNAL HEAD.
Ⓦ REMOVE AS CLASS 2 EXCAVATION EXISTING CURB AND GUTTER AND PORTION OF EXISTING ISLAND TO A DEPTH OF 14" BELOW EXISTING ROADWAY ELEVATION.
Ⓧ INSTALL STANDARD TYPE A COMBINATION CURB AND GUTTER 12 INCH GUTTER PAN, 8 INCH DEPTH.
Ⓨ EXPOSE AND TIE EXISTING CONDUIT USING THREADED TERMINAL ADAPTER TO CONVERT GALVANIZED CONDUIT TO PVC CONDUIT AND REROUTE CONDUIT TO NEW HANDHOLE.

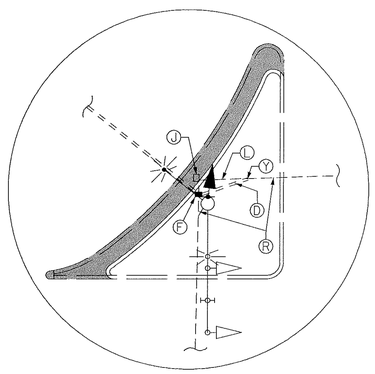

DETAIL 'A'
SCALE : 1"=20'

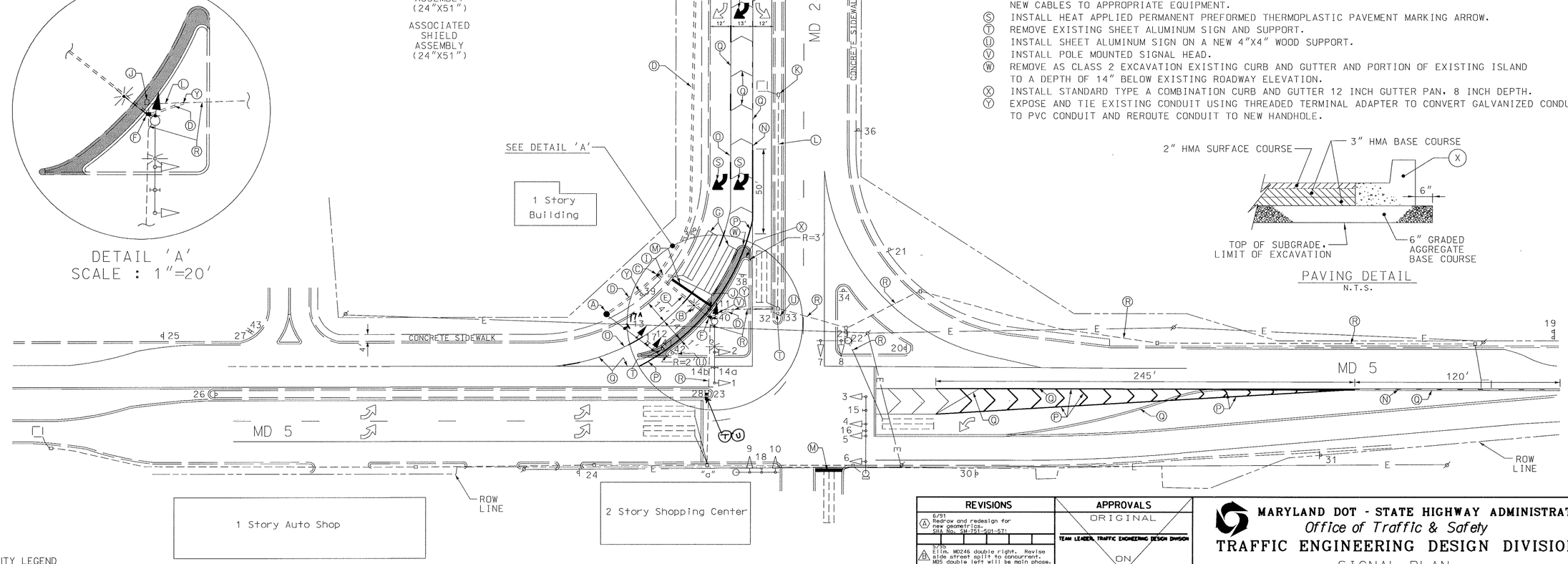

PAVING DETAIL
N.T.S.

UTILITY LEGEND

G — G	GAS MAIN
W — W	WATER MAIN
S — S	SEWER MAIN
E — E	ELECTRIC CABLES
A — A	AERIAL CABLES
T — T	TELEPHONE CABLES

LEGEND:

CLASS II EXCAVATION

CENTURY ENGINEERING, INC.
CONSULTING ENGINEERS - PLANNERS
32 WEST ROAD
TOWSON, MARYLAND 21204

REVISIONS

A	6/91 Redraw and redesign for new geometrics. SHA No. SM-751-501-571
B	5/95 Elim. MD246 double right. Revise side street split to concurrent. MD5 double left will be main phase.
C	3/99 Provide firehouse pre-emption equipment.
D	9/00 Modify geometrics to provide double right for MD 246. Provide signal for MD246 right turn.

CEI

APPROVALS
ORIGINAL
TEAM LEADER, TRAFFIC ENGINEERING DESIGN DIVISION
ON
ASST. CHIEF TRAFFIC ENGINEERING DESIGN DIVISION
CHIEF, TRAFFIC ENGINEERING DESIGN DIVISION
FILE
DIRECTOR, TRAFFIC & SAFETY

MARYLAND DOT - STATE HIGHWAY ADMINISTRATION
Office of Traffic & Safety
TRAFFIC ENGINEERING DESIGN DIVISION
SIGNAL PLAN
MD 5 AT MD 246
GREAT MILLS, MARYLAND

DRAWN BY:	S.P.P.	F.A.P. NO.	AC-STPG-0005(683)E	TS NO. 2071-Ⓑ	SHEET NO.
CHECKED BY:	T.H.	S.H.A. NO.	ST-7718(1)(8)		
SCALE:	1"= 30	COUNTY:	ST MARY'S	T.I.M.S. NO.	
DATE:	8/00	LOG MILE:	18000517.20		01 OF 02

o:\transdwg\97006\37\md5md246.dgn 13 NOV 2000