PROJECT DESCRIPTION

US 40 ALTERNATE AND MD 66

THIS PROJECT INVOLVES REPLACING THE LOOP DETECTOR ON MD 66 AND MICROLOOP PROBES ALONG US 40 ALTERNATE. THE EXISTING HIB FOR EASTBOUND US 40 ALTERNATE IS BEING REPLACED WITH A NEW HIB. THE OPERATION AND PHASING OF THE INTERSECTION SHALL REMAIN AS EXISTING.

WIRING DIAGRAM: US 40 ALT. AND MD 66

A - 5 CONDUCTOR (NO. 14 AWG)

B, C } MICROLOOP PROBE CABLE

D - STRANDED BARE COPPER GROUND WIRE

LW - LOOP WIRE (NO. 14 AWG)

✦ GROUND ROD

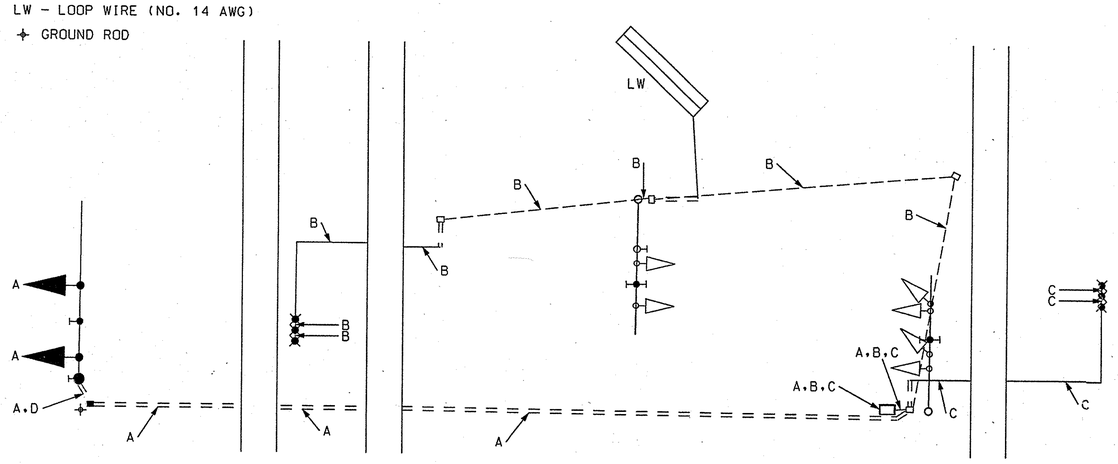

EQUIPMENT LIST "A"

EQUIPMENT TO BE FURNISHED BY SHA

CATEGORY CODE	DESCRIPTION	UNIT	QUANTITY
900000	HARDWARE FOR BANDING SIGN	EA	2
900000	SHEET ALUMINUM SIGN WITH HARDWARE FOR ATTACHING TO MAST ARM	SF	77
	1 EACH - W3-3(2). "SIGNAL AHEAD PREPARE TO STOP WHEN FLASHING". 120"X60"		
	2 EACH - D-3(1). "Maple Ave (RIGHT ARROW)". 60"X16"		
	2 EACH - D-3(1). "(LEFT ARROW) Maple Ave". 60"X16"		

EQUIPMENT LIST "B"

EQUIPMENT TO BE FURNISHED AND/OR INSTALLED BY THE CONTRACTOR

CATEGORY CODE	DESCRIPTION	UNIT	QUANTITY
800000	ADJUST SIGNAL HANDBOX	LS	1
800000	INSTALL SHEET ALUMINUM SIGN WITH MAST ARM MOUNT HARDWARE	SF	77
800000	FURNISH AND INSTALL 27' STEEL POLE WITH 50' MAST ARM	EA	1
800000	FURNISH AND INSTALL MICROLOOP TRIPLE PROBE SET WITH LEAD-INS AND 500 LF OF LEAD-IN CABLE	EA	2
800000	CUT. CLEAN. GALVANIZE AND CAP SIGNAL STRUCTURE	EA	2
800000	FURNISH AND INSTALL 2" SCHEDULE 80 RIGID PVC CONDUIT - TRENCH	LF	650
800000	REMOVE AND DISPOSE OF EXISTING SIGNAL AND EQUIPMENT, INCLUDING ATTACHED SIGNS	LS	1
800000	FURNISH AND INSTALL 12" VEHICULAR SIGNAL HEAD SECTION. BLACK FACE	EA	2
800000	REMOVE EXISTING OVERHEAD SIGNAL CABLE	LF	650
801004	FURNISH AND INSTALL CONCRETE FOR SIGNAL FOUNDATION	CY	2.75
801605	FURNISH AND INSTALL SHEET ALUMINUM SIGNS	SF	12.5
802501	FURNISH AND INSTALL NO. 6 AWG STRANDED BARE COPPER GROUND WIRE	LF	10
805011	FURNISH AND INSTALL 1 INCH ELECTRICAL CONDUIT GALVANIZED SLEEVE	LF	30
805105	FURNISH AND INSTALL 2" SCHEDULE 80 RIGID PVC CONDUIT - BORED	LF	40
811001	FURNISH AND INSTALL ELECTRIC HANDHOLES	EA	3
813010	BAND SIGN TO SIGNAL POLE	EA	2
837001	FURNISH AND INSTALL GROUND ROD - 3/4" DIAMETER BY 10' LENGTH	EA	1
861107	FURNISH AND INSTALL ELECTRICAL CABLE - 5 CONDUCTOR NO. 14 AWG	LF	725
862101	FURNISH AND INSTALL LOOP WIRE ENCASED IN FLEXIBLE TUBING (NO. 14 AWG)	LF	450
862102	FURNISH AND INSTALL SAW CUT FOR SIGNAL (LOOP DETECTOR)	LF	650

MARYLAND DOT - STATE HIGHWAY ADMINISTRATION
Office of Traffic & Safety
TRAFFIC ENGINEERING DESIGN DIVISION
SIGNAL PLAN
US 40 ALT AND MD 66
US 40 ALTERNATE: BOONSBORO

PB 100 YEARS

DRAWN BY: DMG	F.A.P. NO. SEE TITLE SHEET	TS NO. TS-1055E	SHEET NO.
CHECKED BY: GSJ	S.H.A. NO. WA9605184		
SCALE: 1"=20'	COUNTY: WASHINGTON	T.I.M.S. NO. 0136	79 OF 126
DATE: JANUARY 2000	LOG MILE: 21A04009.75		

g:\projects\17855g3\plans\gp03.dgn (Thu Jan 27 12:34:45 2000)