FHWA REGION NO	STATE	FED. AID PROJ. NO	SHEET NO.	TOTAL SHEETS
3	MD.	STPG-218-1(7)E	32	66

(EAST WASHINGTON STREET) IS
RUN IN AN EAST-WEST DIRECTION.

PHASING DIAGRAM

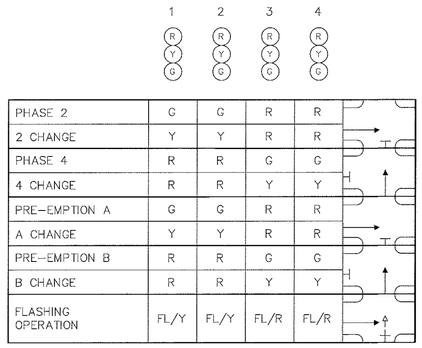

	1	2	3	4
PHASE 2	G	G	R	R
2 CHANGE	Y	Y	R	R
PHASE 4	R	R	G	G
4 CHANGE	R	R	Y	Y
PRE-EMPTION A	G	G	R	R
A CHANGE	Y	Y	R	R
PRE-EMPTION B	R	R	G	G
B CHANGE	R	R	Y	Y
FLASHING OPERATION	FL/Y	FL/Y	FL/R	FL/R

NEMA PHASING

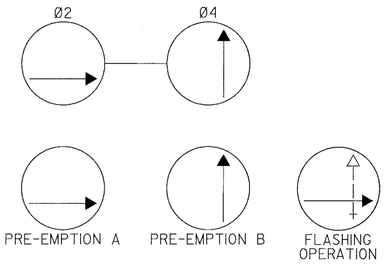

PHASING NOTES:

1. PHASES ASSOCIATED BY A SOLID LINE WILL NOT OPERATE CONCURRENTLY
2. PHASES ASSOCIATED BY A DASHED LINE WILL OPERATE CONCURRENTLY

SIGNALS

1,2,3,4

R
Y
G

12"

→ – OPTICAL PRE-EMPTION DETECTOR EYE

SIGNS

5
ONE WAY
R6-1(L)
36" x 12"

6
ONLY
R3-5L
30" x 36"

7
N. Locust St
D3-2
Var. x 16"

8
ONE WAY
R6-1(R)
36" x 12"

9
E. Washington St
D3-2
Var. x 16"

10
NO TURN ON RED
R10-11b
24" x 24"

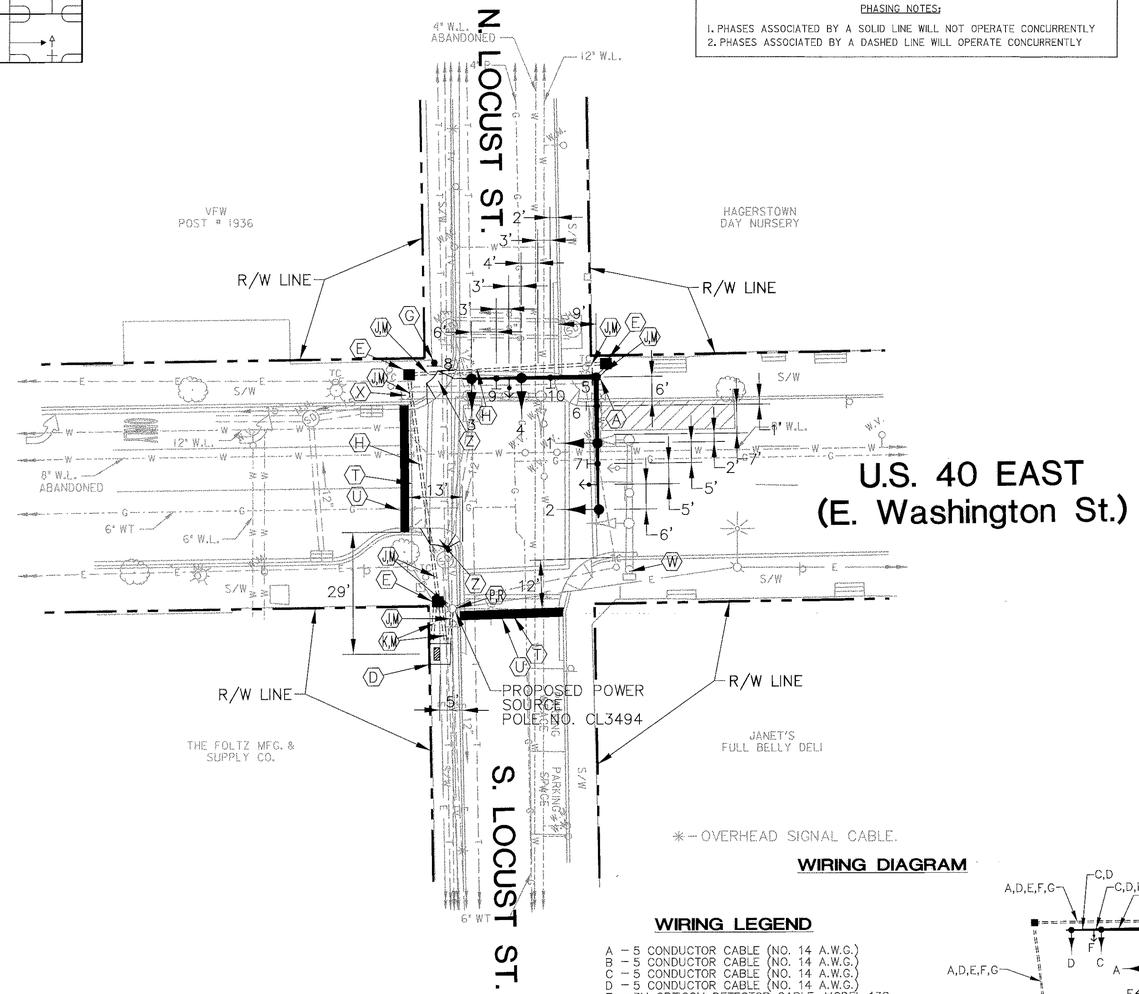

EQUIPMENT LISTS

A. EQUIPMENT TO BE SUPPLIED BY THE SHA.

QUANTITY	UNIT	SPECIFICATION SECTION	DESCRIPTION
1	EA	SP	BASE MOUNTED LOCAL CABINET (SIZE 5) LESS DETECTION EQUIPMENT WITH 8 PHASE ASC II CONTROLLER WITH TELEMETRY AND OPTICOM PRE-EMPTION MODULE
40	SF	813	FLAT SHEET ALUMINUM SIGNS CONSISTING OF: – 1 EACH R3-5L (30" X 36")–MAST ARM MOUNT – 1 EACH R6-1L (36" X 12")–POLE MOUNT – 1 EACH R6-1R (36" X 12")–GROUND MOUNT – 1 EACH R10-11b (24" X 24")–MAST ARM MOUNT – 1 EACH D3-2 (E. Washington St) (VAR." X 16")–MAST ARM MOUNT – 1 EACH D3-2 (N. Locust St) (VAR." X 16")–MAST ARM MOUNT

B. EQUIPMENT TO BE FURNISHED AND/OR INSTALLED BY THE CONTRACTOR.

QUANTITY	UNIT	SPECIFICATION SECTION	DESCRIPTION
3	CY	205	TEST PIT EXCAVATION
9	CY	206	REMOVAL OF EXISTING SIDEWALK
60	LF	SP 555	24 INCH WHITE PERMANENT PREFORMED PAVEMENT MARKING TAPE
60	LF	SP	REMOVE EXISTING PAVEMENT MARKINGS–ANY WIDTH
675	SF	610	4 INCH CONCRETE SIDEWALK
1	EA	816	INSTALL CONTROLLER AND CABINET–BASE MOUNT
37	SF	813	INSTALL OVERHEAD SIGN
3	SF	813	INSTALL GROUND MOUNTED SIGN
20	LF	812	FURNISH AND INSTALL WOOD SIGN
4	EA	SP	FURNISH AND INSTALL 12 INCH 1 WAY 3 SECTION (R, Y, G) SIGNAL HEAD HAVING PROPER ADJUSTABLE MAST ARM BRACKET, AND TUNNEL VISORS–PAINTED BLACK
2	EA	SP	FURNISH AND INSTALL OPTICOM DETECTOR EYE–MODEL 521
3	EA	811	FURNISH AND INSTALL ELECTRICAL HANDHOLE
6	CY	801	FURNISH AND INSTALL CONCRETE FOR SIGNAL FOUNDATION
40	LF	805	FURNISH AND INSTALL 2" SCHEDULE 80 RIGID PVC CONDUIT–RISER
75	LF	805	FURNISH AND INSTALL 2" SCHEDULE 40 RIGID PVC CONDUIT–TRENCHED
30	LF	805	FURNISH AND INSTALL 4" SCHEDULE 40 RIGID PVC CONDUIT–TRENCHED
60	LF	805	FURNISH AND INSTALL 2" SCHEDULE 80 RIGID PVC CONDUIT–SLOTTED
1	EA	807	FURNISH AND INSTALL CONTROL AND DISTRIBUTION EQUIPMENT
1	EA	SP	FURNISH AND INSTALL 21–FOOT STEEL POLE WITH TWIN 50–FOOT AND 50–FOOT MAST ARMS–PAINTED GREEN
2	EA	SP	CUT, CLEAN AND CAP TRAFFIC SIGNAL STRUCTURE
1	EA	SP	AS–BUILT FOR TRAFFIC SIGNAL
2	EA	804	FURNISH AND INSTALL GROUND ROD–3/4 INCH DIAMETER X 10–FOOT LENGTH
150	LF	810	FURNISH AND INSTALL NO. 6 AWG STRANDED BARE COPPER GROUND WIRE
175	LF	810	FURNISH AND INSTALL ELECTRICAL CABLE–1 CONDUCTOR (NO. 4 AWG – THHN/THWN)
425	LF	810	FURNISH AND INSTALL ELECTRICAL CABLE–5 CONDUCTOR (NO 14 AWG)
400	LF	810	FURNISH AND INSTALL OPTICOM M–138 DETECTOR CABLE
2	EA	SP	REMOVE AND DISPOSE OF EXISTING FOUNDATION 12" BELOW GRADE
1	LS	SP	DELIVERY OF SALVAGED EQUIPMENT
1	LS	SP	REMOVE AND DISPOSE OF EXISTING EQUIPMENT
1	LS	SP	REMOVAL OF EXISTING SIGNAL EQUIPMENT TO BE SALVAGED

NOTE: ALL EQUIPMENT AND/OR MATERIALS TO BE REMOVED BY THE CONTRACTOR, BUT NOT LISTED BELOW, SHALL BECOME THE PROPERTY OF THE CONTRACTOR.

QUANTITY	UNIT	DESCRIPTION
1	EA	CONTROLLER AND CABINET
2	EA	OPTICOM DETECTOR EYE

CONSTRUCTION DETAILS

STEEL POLE, 30' AND 34' MAST ARMS, SIGNAL HEADS, SIGNS AND OPTICOM
NOTE: 1–2", 90–DEGREE P.V.C. BEND).

E–MOUNTED CABINET, SIZE #5, AND CONTROLLER WITH ALL NECESSARY
S SHOWN (NOTE: 2–4", 90–DEGREE P.V.C. BENDS; AND, 2–2",
P.V.C. BENDS.).

DHOLE.

UND MOUNTED SIGN

P.V.C. (SCHEDULE 80) CONDUIT (SLOTTED).

P.V.C. (SCHEDULE 40) CONDUIT (TRENCHED).

P.V.C. (SCHEDULE 80) CONDUIT (TRENCHED).

REPLACE EXISTING SIDEWALK.

P.V.C. (SCHEDULE 80) ELECTRICAL CONDUIT – RISER AND 2" WEATHERHEAD.

OF 2" P.V.C. (SCHEDULE 80) ELECTRICAL CONDUIT – RISER AND COIL 25'
AL CABLE.

TING STOP BAR.

SOLID WHITE LINE.

TING STEEL POLE, MAST ARM, SIGNALS, SIGNS, CABINET, CONTROLLER,
TECTOR AND FOUNDATION.

TING STEEL POLE, MAST ARM, SIGNALS, SIGNS, OPTICOM
ND FOUNDATION.

SIDEWALK RAMP.

LITY LEGEND

— G —	GAS MAIN
— W —	WATER MAIN
— S —	SEWER MAIN
====:	STORM DRAIN
— TV —	CABLE TELEVISION
— E —	ELECTRIC CABLES
— T —	TELEPHONE CABLES
— A —	AERIAL CABLES

WIRING LEGEND

A – 5 CONDUCTOR CABLE (NO. 14 A.W.G.)
B – 5 CONDUCTOR CABLE (NO. 14 A.W.G.)
C – 5 CONDUCTOR CABLE (NO. 14 A.W.G.)
D – 5 CONDUCTOR CABLE (NO. 14 A.W.G.)
E – 3M OPTICOM DETECTOR CABLE, MODEL 138
F – 3M OPTICOM DETECTOR CABLE, MODEL 138
G – STRANDED BARE COPPER GROUND WIRE (NO. 6 A.W.G.)
H – 1 CONDUCTOR CABLE (NO. 4 A.W.G.)
J – 1 CONDUCTOR CABLE (NO. 4 A.W.G.)
K – 1 CONDUCTOR CABLE (NO. 4 A.W.G.)
× – 3/8"x10' GROUND ROD
PS – PROPOSED ELECTRICAL SERVICE
I/C – INTERCONNECT CABLE

WIRING DIAGRAM

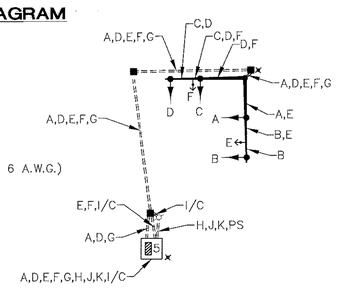

INTERESECTION DESCRIPTION

I. GENERAL

THIS INTERSECTION IS U.S. 40 EAST (EAST WASHINGTON STREET) AND NORTH/SOUTH LOCUST STREET. CONSTRUCTION AT THIS INTERSECTION INVOLVES THE RECONSTRUCTION OF THE EXISTING TRAFFIC SIGNAL AND INTERCONNECTION WITH THE OTHER SIGNALIZED INTERSECTIONS IN THE NEW CITY–WIDE SYSTEM. IT IS ASSUMED THAT U.S. 40 EAST (EAST WASHINGTON STREET) RUNS IN AN EAST–WEST DIRECTION.

II. INTERSECTION OPERATION

THE INTERSECTION WILL OPERATE IN A NEMA TWO (2) PHASE PRE–TIMED MODE. EASTBOUND U.S. 40 EAST (EAST WASHINGTON STREET) AND NORTHBOUND SOUTH LOCUST STREET WILL OPERATE IN SEPERATE PHASES.

PRE–EMPTION ON EASTBOUND U.S. 40 EAST (EAST WASHINGTON STREET) WILL CALL PRE–EMPTION A. PRE–EMPTION ON NORTHBOUND SOUTH LOCUST STREET WILL CALL PRE–EMPTION B.

A NEW EIGHT PHASE FULLY ACTUATED CONTROLLER WITH TELEMETRY MODULE AND PRE–EMPTION HOUSED IN A GROUND MOUNTED CABINET WILL BE INSTALLED.

NOTE: EXISTING RIGHT–OF–WAY BASED ON INFORMATION PROVIDED BY THE CITY OF HAGERSTOWN.

A/E GROUP, INC.
ENGINEERS • PLANNERS
181 E. Main Street
Westminster, Maryland 21158
A/E Job No. 95–289

REVISIONS	APPROVALS
	CHIEF, SIGNAL DESIGN SECTION
	ASST. DISTRICT ENGINEER, TRAFFIC
	CHIEF, TRAFFIC ENGINEERING DESIGN DIVISION
	DIRECTOR, OFFICE OF TRAFFIC & SAFETY

MDOT – STATE HIGHWAY ADMINISTRATION
Office of Traffic & Safety
TRAFFIC ENGINEERING DESIGN DIVISION LOG MI. 21E04036.23

DRAWN BY: M. GESELL
DES. BY: J. LAWRENCE
CHK. BY:

US 40 East (East Washington St.) at North/South Locust St.

COUNTY: WASHINGTON

DATE: 05/30/97
SCALE: 1" = 20'
F.A.P. NO. STPG–218–1(7)E
S.H.A. NO. WA9535185
TS NO. 3692
SHEET NO. 32 OF 66