| FHWA REGION NO | STATE | FED. AID PROJ. NO | SHEET NO. | TOTAL SHEETS |
|---|---|---|---|---|
| 3 | MD. | STPG-218-1(7)E | 54 | 66 |

## PHASING DIAGRAM

| | 1 | 2 | 3 | 4 | 5 | 6 | 7 | 8 | 9 | 10 | 11 | 12 | 13 | 14 |
|---|---|---|---|---|---|---|---|---|---|---|---|---|---|---|
| PHASE 2+5 | R | R | G ←G— | G | R | R | DW | DW | DW | DW | DW | DW | DW | DW |
| 2+5 CHANGE | R | R | G ←Y— | G | R | R | DW | DW | DW | DW | DW | DW | DW | DW |
| PHASE 2+6 | G | G | G | G | R | R | DW | DW | DW | DW | DW | DW | DW | DW |
| 2+6 CHANGE | Y | Y | Y | Y | R | R | DW | DW | DW | DW | DW | DW | DW | DW |
| PHASE 3 | R | R | R | R | G | G | DW | DW | DW | DW | DW | DW | DW | DW |
| 3 CHANGE | R | R | R | R | Y | Y | DW | DW | DW | DW | DW | DW | DW | DW |
| PHASE 4 | R | R | R | R | R | R | W | W | W | W | W | W | W | W |
| PHASE 4 PED. CLEAR | R | R | R | R | R | R | FL DW | FL DW | FL DW | FL DW | FL DW | FL DW | FL DW | FL DW |
| 4 PED. CHANGE | R | R | R | R | R | R | DW | DW | DW | DW | DW | DW | DW | DW |
| PRE-EMPTION A | R | R | G ←G— | G | R | R | DW | DW | DW | DW | DW | DW | DW | DW |
| CHANGE A | R | R | G ←Y— | G | R | R | DW | DW | DW | DW | DW | DW | DW | DW |
| PRE-EMPTION B | G | G | R | R | R | R | DW | DW | DW | DW | DW | DW | DW | DW |
| CHANGE B | Y | Y | R | R | R | R | DW | DW | DW | DW | DW | DW | DW | DW |
| PRE-EMPTION C | R | R | R | R | G | G | DW | DW | DW | DW | DW | DW | DW | DW |
| CHANGE C | R | R | R | R | Y | Y | DW | DW | DW | DW | DW | DW | DW | DW |
| FLASHING OPERATION | FL R | FL R | FL R | FL R | FL Y | FL Y | DARK | DARK | DARK | DARK | DARK | DARK | DARK | DARK |

## DETAIL 'A'

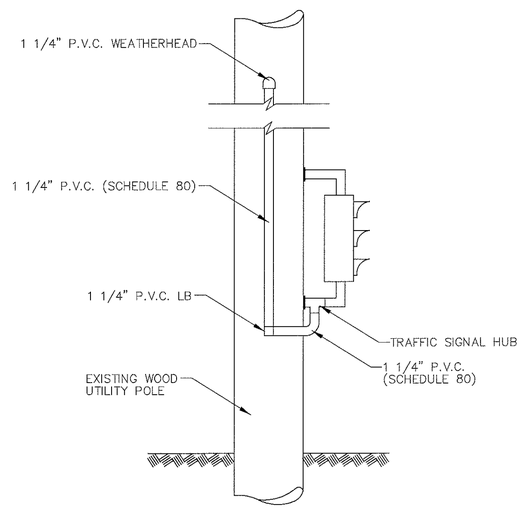


## DETAIL 'B'

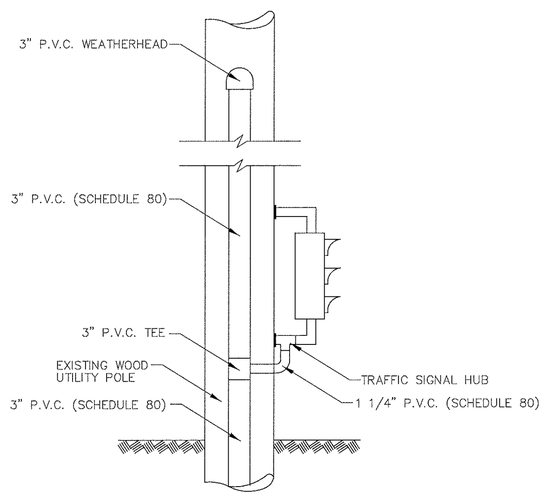


## EQUIPMENT LISTS

A. EQUIPMENT TO BE SUPPLIED BY THE SHA.

| QUANTITY | UNIT | SPECIFICATION SECTION | DESCRIPTION |
|---|---|---|---|
| 1 | EA | SP | BASE MOUNTED LOCAL CABINET (SIZE 5) LESS DETECTION EQUIPMENT WITH 8 PHASE ASC II CONTROLLER WITH TELEMETRY AND OPTICOM PRE-EMPTION MODULE |

B. EQUIPMENT TO BE FURNISHED AND/OR INSTALLED BY THE CONTRACTOR.

| QUANTITY | UNIT | SPECIFICATION SECTION | DESCRIPTION |
|---|---|---|---|
| 1 | CY | 205 | TEST PIT EXCAVATION |
| 2 | CY | 206 | REMOVAL OF EXISTING SIDEWALK |
| 125 | SF | 610 | 4 INCH CONCRETE SIDEWALK |
| 1 | EA | 816 | INSTALL CONTROLLER AND CABINET-BASE MOUNT |
| 3 | EA | SP | FURNISH AND INSTALL 12 INCH 2 WAY 2 SECTION PEDESTRIAN SIGNAL HEAD-SIDE POLE MOUNT-PAINTED BLACK |
| 1 | EA | 811 | FURNISH AND INSTALL ELECTRICAL HANDHOLE |
| 1 | LS | SP | REMOVE AND REPLACE CABLE RINGS ON EXISTING SPAN WIRE |
| 1 | CY | 801 | FURNISH AND INSTALL CONCRETE FOR SIGNAL FOUNDATION |
| 35 | LF | 805 | FURNISH AND INSTALL 1 1/4" SCHEDULE 80 RIGID PVC CONDUIT-RISER |
| 10 | LF | 805 | FURNISH AND INSTALL 2" SCHEDULE 80 RIGID PVC CONDUIT-RISER |
| 35 | LF | 805 | FURNISH AND INSTALL 3" SCHEDULE 80 RIGID PVC CONDUIT-RISER |
| 10 | LF | 805 | FURNISH AND INSTALL 2" SCHEDULE 40 RIGID PVC CONDUIT-TRENCHED |
| 10 | LF | 805 | FURNISH AND INSTALL 3" SCHEDULE 40 RIGID PVC CONDUIT-TRENCHED |
| 20 | LF | 805 | FURNISH AND INSTALL 4" SCHEDULE 40 RIGID PVC CONDUIT-TRENCHED |
| 1 | EA | 807 | FURNISH AND INSTALL CONTROL AND DISTRIBUTION EQUIPMENT |
| 1 | EA | SP | AS-BUILT FOR TRAFFIC SIGNAL |
| 2 | EA | 804 | FURNISH AND INSTALL GROUND ROD-3/4 INCH DIAMETER X 10-FOOT LENGTH |
| 50 | LF | 810 | FURNISH AND INSTALL NO. 6 AWG STRANDED BARE COPPER GROUND WIRE |
| 175 | LF | 810 | FURNISH AND INSTALL ELECTRICAL CABLE-1 CONDUCTOR (NO. 4 AWG - THHN/THWN) |
| 325 | LF | 810 | FURNISH AND INSTALL ELECTRICAL CABLE-3 CONDUCTOR (NO 14 AWG) |
| 750 | LF | 810 | FURNISH AND INSTALL ELECTRICAL CABLE-5 CONDUCTOR (NO 14 AWG) |
| 125 | LF | 810 | FURNISH AND INSTALL ELECTRICAL CABLE-7 CONDUCTOR (NO 14 AWG) |
| 1150 | LF | 810 | FURNISH AND INSTALL OPTICOM M-138 DETECTOR CABLE |
| 1 | EA | SP | REMOVE AND DISPOSE OF EXISTING FOUNDATION 12" BELOW GRADE |
| 1 | LS | SP | DELIVERY OF SALVAGED EQUIPMENT |
| 1 | LS | SP | REMOVE AND DISPOSE OF EXISTING EQUIPMENT |
| 1 | LS | SP | REMOVAL OF EXISTING SIGNAL EQUIPMENT TO BE SALVAGED |

NOTE: ALL EQUIPMENT AND/OR MATERIALS TO BE REMOVED BY THE CONTRACTOR, BUT NOT LISTED BELOW, SHALL BECOME THE PROPERTY OF THE CONTRACTOR.

| QUANTITY | UNIT | DESCRIPTION |
|---|---|---|
| 1 | EA | CONTROLLER AND CABINET |
| 1 | EA | PEDESTAL POLE AND BASE |

CITY OF HAGERSTOWN, MARYLAND
ENGINEERING DEPARTMENT

LOCATION: South Potomac St. at Baltimore St.

TITLE: TRAFFIC SIGNAL UPGRADE

| | | | |
|---|---|---|---|
| DRAWN BY | A.W. (BASE PLAN) | DATE | 8-96 |
| SURVEY BY | A.J.B. | DATE | 7-96 |
| SCALES | HORIZONTAL: 1" = 10' | VERTICAL: – | |

| APPROVED | FILE NUMBER |
|---|---|
| DATE _____ BY _____ CITY ENGINEER | 67-054-18A |

A/E GROUP, INC.
ENGINEERS • PLANNERS
181 E. Main Street
Westminster, Maryland 21158
A/E Job No. 96-317

| REVISIONS | APPROVALS |
|---|---|
| | CHIEF, SIGNAL DESIGN SECTION |
| | ASST. DISTRICT ENGINEER, TRAFFIC |
| | CHIEF, TRAFFIC ENGINEERING DESIGN DIVISION |
| | DIRECTOR, OFFICE OF TRAFFIC & SAFETY |

MDOT - STATE HIGHWAY ADMINISTRATION
*Office of Traffic & Safety*
TRAFFIC ENGINEERING DESIGN DIVISION

DRAWN BY: T. COURVILLE
DES. BY: J. LAWRENCE
CHK. BY:

DATE: 05/30/97
SCALE: NONE

F.A.P. NO. STPG-218-1(7)E
S.H.A. NO. WA9535185
CITY NO. 87-243-332

# South Potomac St. at Baltimore St.

GENERAL INFORMATION COUNTY: WASHINGTON

TS NO. 3716GI

SHEET NO. 54 OF 66