FHWA REGION NO	STATE	FED. AID PROJ. NO	SHEET NO.	TOTAL SHEETS
3	MD.	STPG-218-1(7)E	38	66

PHASING DIAGRAM

	1	2	3	4	5	6
PHASE 2+6	G	G	G	G	R	R
2+6 CHANGE	Y	Y	Y	Y	R	R
PHASE 4	R	R	R	R	G	G
4 CHANGE	R	R	R	R	Y	Y
FLASHING OPERATION	FL R	FL R	FL R	FL R	FL Y	FL Y

EAST AVENUE IS ASSUMED TO RUN IN AN EAST-WEST DIRECTION.

SIGNALS

1,2,3, 4,5,6

R Y G

8"

SIGNS

7,8

NO TURN ON RED

R10-11b

NOTE: ALL SIGNALS EXCEPT NO. 5 AND ALL SIGNS ARE EXISTING.

DETAIL 'A'

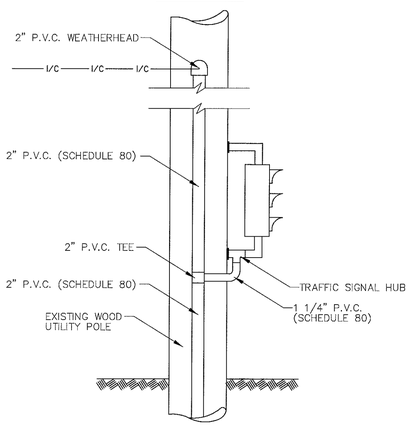

CONSTRUCTION DETAILS

(A) INSTALL BASE MOUNTED CABINET, SIZE #5, AND CONTROLLER WITH ALL NECESSARY EQUIPMENT AS SHOWN (NOTE: 2-4", 90-DEGREE P.V.C. BENDS AND 2-2" 90-DEGREE P.V.C. BENDS).

(B) INSTALL 2" P.V.C. (SCHEDULE 40) ELECTRICAL CONDUIT (TRENCHED).

(C) INSTALL 2" P.V.C. (SCHEDULE 80) ELECTRICAL CONDUIT (SLOTTED).

(D) INSTALL 4" P.V.C. (SCHEDULE 40) ELECTRICAL CONDUIT (TRENCHED).

(E) INSTALL 2" P.V.C. (SCHEDULE 80) ELECTRICAL CONDUIT – RISER WITH 2" WEATHERHEAD, 1 1/4" P.V.C. (SCHEDULE 80) ELECTRICAL CONDUIT – RISER, AND SIGNAL HEAD WITH HUB HARDWARE (SEE DETAIL 'A'). REMOVE EXISTING RISER, SIGNAL HEAD AND HARDWARE.

(G) INSTALL 2" P.V.C. BEND IN EXISTING BASE.

(H) USE EXISTING SIGNAL HEADS.

(M) INSTALL HANDHOLE.

(N) INSTALL HANDHOLE (CITY STANDARD)

(S) REMOVE AND REPLACE EXISTING SIDEWALK.

(T) REMOVE AND REPLACE EXISTING SIDEWALK RAMP.

(U) REMOVE EXISTING CONTROLLER, CABINET, PEDESTAL POLE AND FOUNDATION.

(V) INSTALL 10' OF 2" P.V.C. (SCHEDULE 80) ELECTRICAL CONDUIT – RISER AND COIL 25' OF ADDITIONAL CABLE.

UTILITY LEGEND

G G	GAS MAIN
W W	WATER MAIN
S S	SEWER MAIN
	STORM DRAIN
TV TV	CABLE TELEVISION
E E	ELECTRIC CABLES
T T	TELEPHONE CABLES
A A	AERIAL CABLES

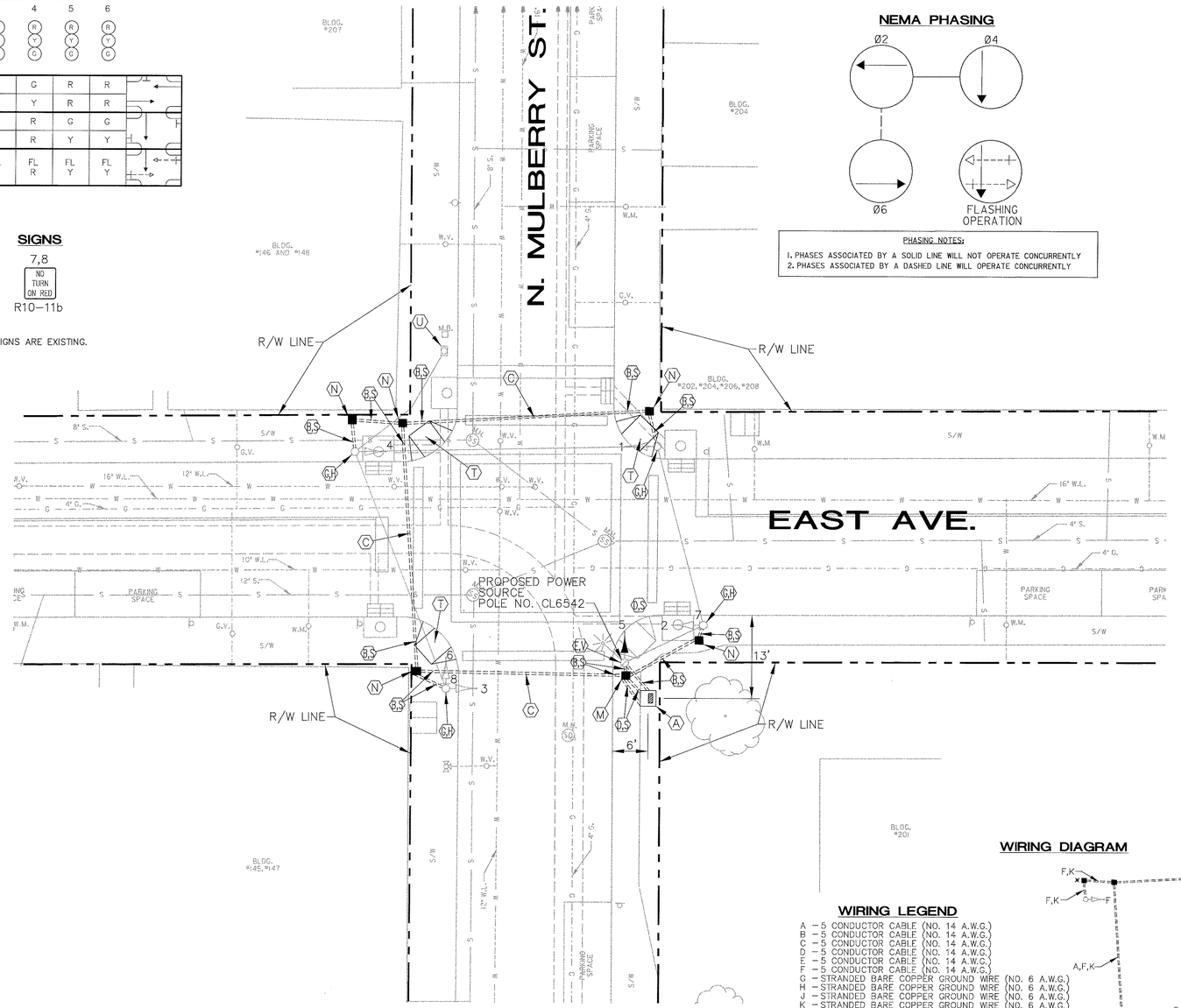

NEMA PHASING

PHASING NOTES:

1. PHASES ASSOCIATED BY A SOLID LINE WILL NOT OPERATE CONCURRENTLY
2. PHASES ASSOCIATED BY A DASHED LINE WILL OPERATE CONCURRENTLY

EQUIPMENT LISTS

A. EQUIPMENT TO BE SUPPLIED BY THE SHA.

QUANTITY	UNIT	SPECIFICATION SECTION	DESCRIPTION
1	EA	SP	BASE MOUNTED LOCAL CABINET (SIZE 5) LESS DETECTION EQUIPMENT WITH 8 PHASE ASC II CONTROLLER WITH TELEMETRY

B. EQUIPMENT TO BE FURNISHED AND/OR INSTALLED BY THE CONTRACTOR.

QUANTITY	UNIT	SPECIFICATION SECTION	DESCRIPTION
5	CY	205	TEST PIT EXCAVATION
10	CY	206	REMOVAL OF EXISTING SIDEWALK
750	SF	610	4 INCH CONCRETE SIDEWALK
1	EA	816	INSTALL CONTROLLER AND CABINET-BASE MOUNT
1	EA	SP	FURNISH AND INSTALL 8 INCH 1 WAY 3 SECTION (R, Y, G) SIGNAL HEAD HAVING PROPER SIDE POLE-MOUNTING BRACKET, AND TUNNEL VISORS-PAINTED BLACK
1	EA	811	FURNISH AND INSTALL ELECTRICAL HANDHOLE
5	EA	SP	FURNISH AND INSTALL ELECTRICAL HANDHOLE (CITY STANDARD)
1	CY	801	FURNISH AND INSTALL CONCRETE FOR SIGNAL FOUNDATION
4	EA	SP	FURNISH AND INSTALL CONDUIT BEND IN EXISTING BASE
5	LF	805	FURNISH AND INSTALL 1 1/4" SCHEDULE 80 RIGID PVC CONDUIT-RISER
40	LF	805	FURNISH AND INSTALL 2" SCHEDULE 80 RIGID PVC CONDUIT-RISER
100	LF	805	FURNISH AND INSTALL 2" SCHEDULE 40 RIGID PVC CONDUIT-TRENCHED
20	LF	805	FURNISH AND INSTALL 4" SCHEDULE 40 RIGID PVC CONDUIT-TRENCHED
80	LF	805	FURNISH AND INSTALL 2" SCHEDULE 80 RIGID PVC CONDUIT-SLOTTED
1	EA	807	FURNISH AND INSTALL CONTROL AND DISTRIBUTION EQUIPMENT
1	EA	SP	AS-BUILT FOR TRAFFIC SIGNAL
6	EA	804	FURNISH AND INSTALL GROUND ROD-3/4 INCH DIAMETER X 10-FOOT LENGTH
250	LF	810	FURNISH AND INSTALL NO. 6 AWG STRANDED BARE COPPER GROUND WIRE
175	LF	810	FURNISH AND INSTALL ELECTRICAL CABLE-1 CONDUCTOR (NO. 4 AWG – THHN/THWN)
525	LF	810	FURNISH AND INSTALL ELECTRICAL CABLE-5 CONDUCTOR (NO 14 AWG)
1	EA	SP	REMOVE AND DISPOSE OF EXISTING FOUNDATION 12" BELOW GRADE
1	LS	SP	DELIVERY OF SALVAGED EQUIPMENT
1	LS	SP	REMOVE AND DISPOSE OF EXISTING EQUIPMENT
1	LS	SP	REMOVAL OF EXISTING SIGNAL EQUIPMENT TO BE SALVAGED

NOTE: ALL EQUIPMENT AND/OR MATERIALS TO BE REMOVED BY THE CONTRACTOR, BUT NOT LISTED BELOW, SHALL BECOME THE PROPERTY OF THE CONTRACTOR.

QUANTITY	UNIT	DESCRIPTION
1	EA	CONTROLLER AND CABINET
1	EA	PEDESTAL POLE AND BASE

WIRING DIAGRAM

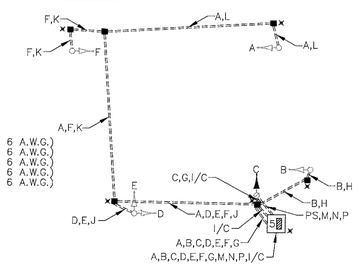

WIRING LEGEND

A – 5 CONDUCTOR CABLE (NO. 14 A.W.G.)
B – 5 CONDUCTOR CABLE (NO. 14 A.W.G.)
C – 5 CONDUCTOR CABLE (NO. 14 A.W.G.)
D – 5 CONDUCTOR CABLE (NO. 14 A.W.G.)
E – 5 CONDUCTOR CABLE (NO. 14 A.W.G.)
F – 5 CONDUCTOR CABLE (NO. 14 A.W.G.)
G – STRANDED BARE COPPER GROUND WIRE (NO. 6 A.W.G.)
H – STRANDED BARE COPPER GROUND WIRE (NO. 6 A.W.G.)
J – STRANDED BARE COPPER GROUND WIRE (NO. 6 A.W.G.)
K – STRANDED BARE COPPER GROUND WIRE (NO. 6 A.W.G.)
L – STRANDED BARE COPPER GROUND WIRE (NO. 6 A.W.G.)
M – 1 CONDUCTOR CABLE (NO. 4 A.W.G.)
N – 1 CONDUCTOR CABLE (NO. 4 A.W.G.)
P – 1 CONDUCTOR CABLE (NO. 4 A.W.G.)
× – 3/4"x10' GROUND ROD
PS – PROPOSED ELECTRICAL SERVICE
I/C – INTERCONNECT CABLE

INTERSECTION DESCRIPTION

I. GENERAL

THIS INTERSECTION IS NORTH MULBERRY STREET AND EAST AVENUE. CONSTRUCTION AT THIS INTERSECTION INVOLVES THE REPLACEMENT OF THE EXISTING TRAFFIC SIGNAL CONTROLLER AND INTERCONNECTION WITH THE OTHER SIGNALIZED INTERSECTIONS IN THE NEW CITY-WIDE SYSTEM. IT IS ASSUMED THAT EAST AVENUE RUNS IN AN EAST-WEST DIRECTION.

II. INTERSECTION OPERATION

THE INTERSECTION WILL OPERATE IN A NEMA THREE (3) PHASE PRE-TIMED MODE. EASTBOUND AND WESTBOUND EAST AVENUE WILL OPERATE CONCURRENTLY. SOUTHBOUND NORTH MULBERRY STREET WILL OPERATE SEPARATELY.

A NEW EIGHT PHASE FULLY ACTUATED CONTROLLER WITH TELEMETRY MODULE HOUSED IN A GROUND MOUNTED CABINET WILL BE INSTALLED.

A/E GROUP, INC.
ENGINEERS • PLANNERS
181 E. Main Street
Westminster, Maryland 21158
A/E Job No. 96-317

REVISIONS	APPROVALS
	CHIEF, SIGNAL DESIGN SECTION
	ASST. DISTRICT ENGINEER, TRAFFIC
	CHIEF, TRAFFIC ENGINEERING DESIGN DIVISION
	DIRECTOR, OFFICE OF TRAFFIC & SAFETY

CITY OF HAGERSTOWN, MARYLAND
ENGINEERING DEPARTMENT

LOCATION: East Ave. at North Mulberry St.

TITLE: TRAFFIC SIGNAL UPGRADE

DRAWN BY	A.W. (BASE PLAN)	DATE	8-96
SURVEY BY	A.J.B.	DATE	7-96
SCALES	HORIZONTAL: 1" = 10'	VERTICAL: –	
APPROVED		FILE NUMBER	
DATE / BY / CITY ENGINEER		67-054-03	

MDOT – STATE HIGHWAY ADMINISTRATION
Office of Traffic & Safety
TRAFFIC ENGINEERING DESIGN DIVISION LOG MI. 21MMUL00.95

DRAWN BY: M. GESELL
DES. BY: J. LAWRENCE
CHK. BY:

North Mulberry St. at East Ave.

COUNTY: WASHINGTON

DATE: 05/30/97
SCALE: 1" = 10'

F.A.P. NO. STPG-218-1(7)E
S.H.A. NO. WA9535185
CITY NO. 07-243-332

TS/STD. NO. 3707

SHEET NO. 38 OF 66