PROJECT DESCRIPTION

I. GENERAL

This project involves the modification of the traffic control signal at the intersection of MD 2-4 and MD 760 in Calvert County, Maryland. MD 2-4 is considered to run in a north/south direction.

Intersection modifications include the widening of MD 760 at MD 2-4.

II. INTERSECTION OPERATION

The intersection operation is to remain unchanged.

Existing cabinet/controller to be utilized.

CONSTRUCTION DETAILS

A. Use existing base mounted cabinet and controller and all attached equipment.
B. Install 12 in. x 32 ft. 2 Ply steel strain pole. install relocated route marker sign (Note: one 3 in. PVC elbow).
C. Use existing signal pole.
D. Install 3/8 in. steel span wire.
E. Use existing handhole.
F. Install handhole.
G. Install 3/8 in. steel span wire with vehicle signal heads.
H. Install 2 in. polyvinyl chloride [Schedule 80] electrical conduit - trenched.
J. Install 3 in. polyvinyl chloride [Schedule 80] electrical conduit - bored.
K. Install 6 in. x 30 in. loop detector (3-6-3 turns).
L. Install non-invasive micro-loop probe (set of 3).
M. Remove handhole.
N. Cap and abandon existing conduit.
O. Abandon existing loop detector.
P Remove existing span wire and all attached equipment.
Q. Install 1 in. liquid tight flexible conduit for loop detector lead-in.
R. Install 24 in. wide pavement marking - white for stop line.
S. Remove existing steel strain pole and all attached equipment. Relocate existing route marker sign.
T. Install 3 in. polyvinyl chloride [Schedule 80 electrical conduit - trenched.
U. Install temporary back guy.

MD 2-4 is considered to run in a North/South direction.

RELOCATED SIGN

EXISTING SIGN

EXISTING SIGNALS

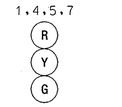

PROPOSED SIGNALS

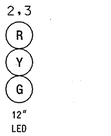

EXISTING NEMA PHASING

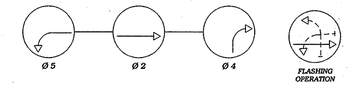

NEMA notes:
Phases associated by a dashed line will operate concurrently.
Phases associated by a solid line will not operate concurrently.

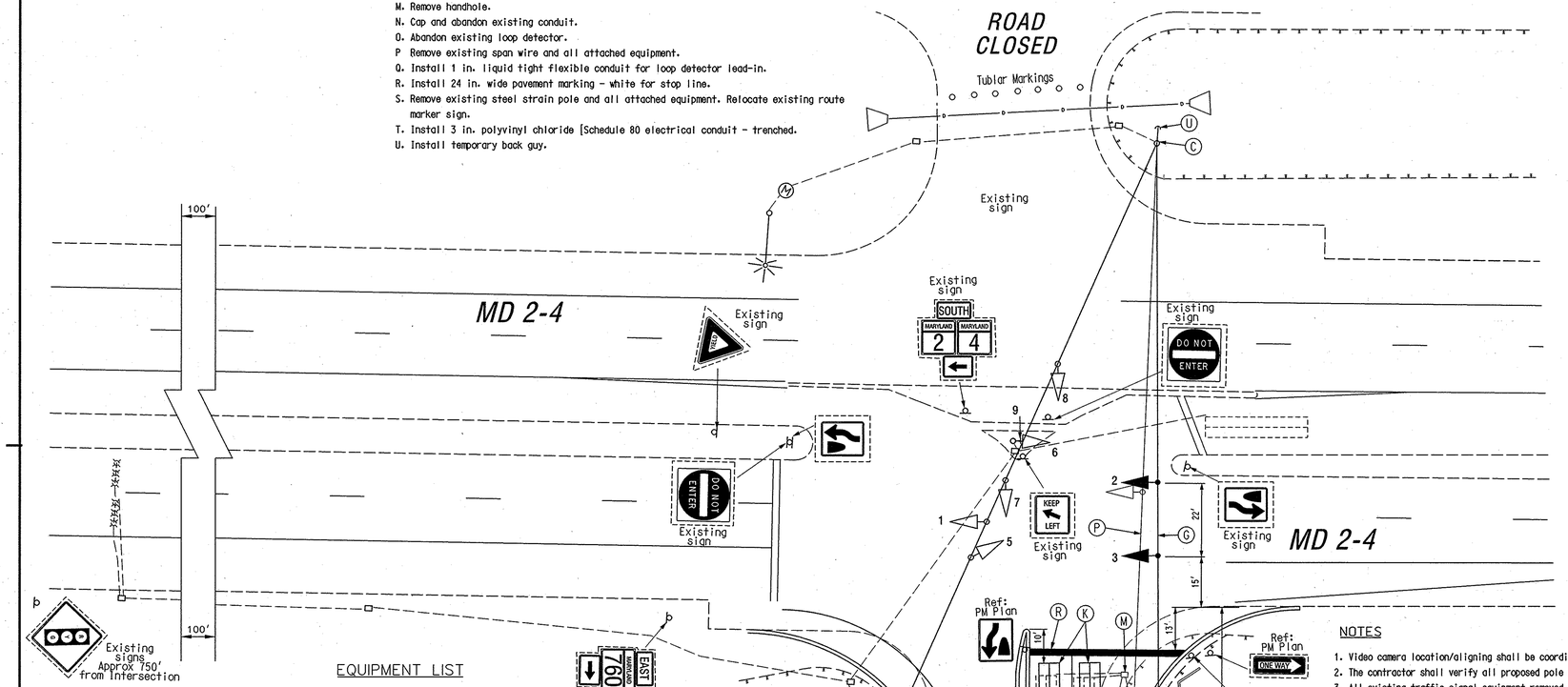

EQUIPMENT LIST

Approved S.H.A. equipment to be purchased by the Developer and installed by the Contractor. All equipment in this list shall have catalog cuts submitted for approval prior to installation.

Quantity	Units	MD-SHA Specification Section	Description
Lump Sum	LS	108	Mobilization.
Lump Sum	LS	104	Maintenance of traffic.
2	EA	---	Non-invasive Micro-loop probe (set of 3) with 500 ft. lead-in cable.
3	EA	811	Handhole.
350	LF	815	2-conductor aluminum shielded electrical cable (No. 14 A.W.G.).
240	LF	815	Sawcut for signal loop detector.
675	LF	810	Loop detector wire (No. 14 A.W.G.) encased in flexible tubing.
10	LF	804	Bare copper stranded ground wire (No. 6 A.W.G.).
55	LF	805	2 in. polyvinyl chloride [Schedule 80] electrical conduit - trenched.
10	LF	805	3 in. polyvinyl chloride [schedule 80] electrical conduit - trenched.
35	LF	805	3 in. polyvinyl chloride [Schedule 80] electrical conduit - bored.
1	EA	804	Ground rod - 3/4 in. diameter x 10 ft. length.
10	LF	805	1 in. liquid flex non-metallic conduit for loop detector sleeve.
1	EA	818	12 in. X 32 ft. 2 Ply steel strain pole.
2	EA	814	12 in., one-way, three section L.E.D. (R,Y,G) adjustable black faced traffic signal head with span wire mounting hardware and tunnel visors.

Quantity	Units	MD-SHA Specification Section	Description
5.0	CY	801	Concrete foundation for traffic signal equipment.
300	LF	819	3/8 in. steel span wire.
30	LF	810	5-conductor electrical cable (No. 14 A.W.G.).
215	LF	810	7-conductor electrical cable (No. 14 A.W.G.).
46	LF	549	24 in. wide HAPPTPM - white for stop line.
1	EA	---	Temporary back guy.
Lump Sum	LS	---	Removal of existing traffic signal equipment.

NOTE

These plans are approved for construction for a period of 1 year from the date of approval construction not begin within this time frame these plans shall be null and void without a re-view from the Traffic Engineering Design Division.

Wiring Diagram

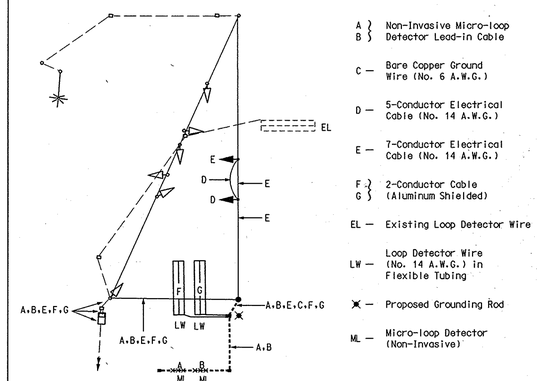

A } B } Non-Invasive Micro-loop Detector Lead-in Cable
C — Bare Copper Ground Wire (No. 6 A.W.G.)
D — 5-Conductor Electrical Cable (No. 14 A.W.G.)
E — 7-Conductor Electrical Cable (No. 14 A.W.G.)
F } G } 2-Conductor Cable (Aluminum Shielded)
EL — Existing Loop Detector Wire
LW — Loop Detector Wire (No. 14 A.W.G.) in Flexible Tubing
— Proposed Grounding Rod
ML — Micro-loop Detector (Non-Invasive)

NOTES

1. Video camera regulation/aligning shall be coordinated with the SHA Engineer.
2. The contractor shall verify all proposed pole and cabinet locations prior to installation.
3. All existing traffic signal equipment removed shall become the property of the signal contractor upon completion of the new signal.
4. All proposed luminaires shall be supplied with a photocell.
5. For final pavement markings refer to the Pavement Marking Plans. Pavement markings detailed are proposed and are to be installed by the Contractor in accordance with MD-SHA standards. All other pavement markings will either be installed as part of the Developer's project or are to be considered as existing.
6. Geometrics shall be confirmed prior to the installation of signal equipment. All traffic signal foundations shall be installed at final sidewalk or curb grade for closed sections, highest roadway profile grade for open sections, to meet clearances as specified in MD 816.03, MD 818.01, MD 818.02, MD 818.04. The contractor shall verify ultimate grades prior to the installation of all signal equipment.
7. All underground and overhead utilities shown on these plans are schematic and are not to be considered complete. The Contractor shall be responsible for notifying all utility companies prior to construction so that all utilities may be located in the field. If the Contractor perceives that a conflict between the utilities and the traffic signal equipment will occur, the Contractor shall notify the appropriate Project Engineer immediately.

GEOMETRIC LEGEND

EXISTING GEOMETRICS
PROPOSED GEOMETRICS

UTILITY LEGEND

G — GAS MAIN
W — WATER MAIN
S — SEWER MAIN
E — ELECTRIC CABLES
D — STORM DRAIN
A — AERIAL CABLES
T — TELEPHONE CABLES

The Traffic Group, Inc.
Suite H
9900 Franklin Square Drive
Baltimore, Maryland 21236
410-931-6600
1-800-583-8411
Fax 410-931-6601

APPROVALS	
TEAM LEADER	ORIGINAL ON FILE
ASST. DIV. CHIEF	
DIVISION CHIEF	
OFFICE DIRECTOR	

REVISIONS		
A	Relocate strain pole SHA: BW95MB2	3/21/07
FJH		

STATE OF MARYLAND
DEPARTMENT OF TRANSPORTATION
STATE HIGHWAY ADMINISTRATION

OFFICE OF TRAFFIC & SAFETY
TRAFFIC ENGINEERING DESIGN DIVISION

MD 2-4 at MD 760

TRAFFIC SIGNAL PLAN

SCALE 1" = 20' DATE Nov. 4, 1997 CONTRACT NO. N/A

DESIGNED BY S. Bloss
DRAWN BY S. Bloss
CHECKED BY T. Zaydel
F.A.P. NO.

COUNTY Calvert
LOGMILE 04000204.58
T.I.M.S. NO. I-085
TOD NO.

DRAWING NO. TS - 3529A

SHEET NO. 1 OF 1

DRILL HOLES

DRILL HOLES

DRILL HOLES

e:\jobs\2002\2002-0100\Calvert\MD 760-MD2-4-TS.dgn 3/22/2007