F H W A REGION NO.	STATE	FED. AID PROJ. NO.	SHEET NO.	TOTAL SHEETS
3	MD	SEE TITLE SHEET	421	529

MD 108 IS ASSUMED TO RUN IN A EAST/WEST DIRECTION.

Construction Details

A. Install 27 ft. steel pole with twin 60 ft. & 50 ft. mast arms signal heads, signs and 20 ft. lighting arm with a 250 watt HPS lamp and luminaire. (Note: one - 2 in. PVC schedule 40 conduit bend and four - 2 in. x 90 in. anchor bolts. The contractor shall verify grading in these areas to obtain proper signal head clearance.

B. Install 27 ft. steel pole with a single 38 ft. mast arm and signal heads, signs, and 20 ft. lighting arm with a 250 watt HPS lamp and luminaire as shown. (Note: one - 2 in. PVC schedule 40 conduit bend and four - 1 3/4 in. x 90 in. anchor bolts).

C. Install 2 in. PVC schedule 40 electrical conduit - trenched.

D. Install handhole

E. Use existing handhole.

F. Install 1 in. liquid tight flexible non-metallic conduit for detector wire sleeve.

G. Deleted.

H. Use existing conduit.

J. Abandon existing detector.

K. Install microloop probe set as shown.

L. Install 6 ft. x 30 ft. quadrulpe loop detector (3-6-3 turns) encased in flexible tubing.

M. Install 24 in. white permanent preformed pavement marking tape as shown.

N. Install 4 in. PVC schedule 80 electrical conduit- pushed / bored.

O. Install 4 in. PVC schedule 40 electrical conduit- trenched.

P. Install base mounted controller and cabinet (size 6) as shown. (Note: two - 4 in. PVC schedule 40, one - 2 in. PVC schedule 40, and one - 2 in. PVC schedule 80 conduit bends)

Q. Remove existing strain pole and/or foundation and controller cabinet.

R. Install 1 in. galvanized electrical conduit for detector wire sleeve.

S. Remove existing span wire, signal heads and signs.

T. Install ground mounted sign.

U. Install 3 in. PVC schedule 80 electrical conduit - pushed. bored.

V. Abondon existing conduit or handhole.

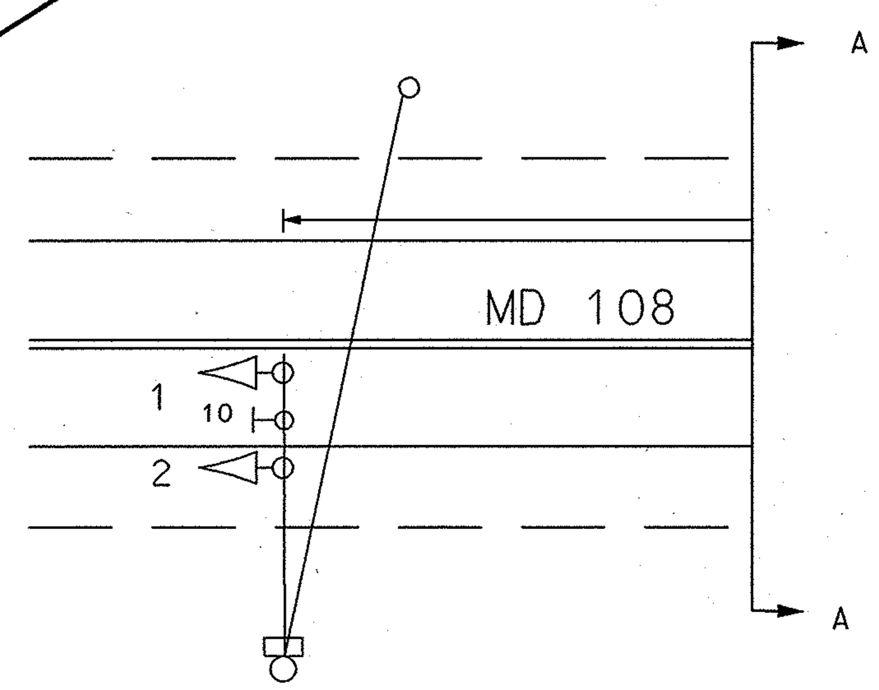

GENERAL NOTES
1. PAVEMENT MARKINGS DETAILED ARE PROPOSED AND ARE TO BE INSTALLED BY THE CONTRACTOR IN ACCORDANCE WITH SHA STANDARDS.
2. "D.O." INDICATES DELAY OUTPUT LOOP DETECTOR.
3. THE LOOP DETECTORS AND CONDUITS MUST BE INSTALLED PRIOR TO THE INSTALLATION OF THE PAVEMENT MARKINGS.
4. CONTRACTOR MUST VERIFY THE LOCATION OF ALL PROPOSED GEOMETRICS PRIOR TO INSTALLING SIGNAL EQUIPMENT.
5. ALL PROPOSED TRAFFIC SIGNAL EQUIPMENT SHALL BE INSTALLED TO FINAL GRADE.
6. REFER TO **PAVEMENT MARKING** PLANS FOR ADDITIONAL SIGNING AND PAVEMENT MARKING

VOID

UTILITY LEGEND	
T — T	TELEPHONE CABLES
G — G	GAS MAIN
W — W	WATER MAIN
S — S	SEWER MAIN
E — E	ELECTRIC CABLES
A — A	AERIAL CABLES
BC	BURIED CABLE
SD	STORM DRAIN

GEOMETRIC LEGEND	
— — —	EXISTING GEOMETRICS
———	PROPOSED GEOMETRICS

FILENAME:F:\PROJECTS\8810002\DGN\SIGNAL\PHASE4\SSU4M108.DGN

DCI CONSULTING ENGINEERS COLUMBIA, MARYLAND

REVISIONS
9 REDLINE NO. 9, 4/29/98 DELETE SHEET
DM/DCI
© RECONSTRUCT SIGNAL SHA PROJECT NO. HO-661-701-770 10/96
LSC DC

APPROVALS
ASST. DIV. CHIEF, SIGNAL DESIGN SECTION
ASST. DISTRICT ENGINEER, TRAFFIC
CHIEF, TRAFFIC ENGINEERING DESIGN DIVISION
DEPUTY CHIEF ENGINEER, OFFICE OF TRAFFIC

ORIGINALS ON FILE

SIG-10 | SIGNAL #5 ULTIMATE

MARYLAND DOT - STATE HIGHWAY ADMINISTRATION
Office of Traffic & Safety
TRAFFIC ENGINEERING DESIGN DIVISION

ORIGINAL DRAWN BY	J. GORDON	MD 108 AT MD 104	
DES. BY			
CHK. BY	D. ZAFIRIS	LOG MILE	COUNTY: HOWARD
DATE: 10/96	F.A.P. NO. SEE TITLE SHEET	TS/FILE NO. 1589C	SHEET NO. 421 OF 529
SCALE: 1"=20'	S.H.A. NO. HO-661-502-770		