F.H.W.A. REGION NO.	STATE	FED. AD PROJ. NO.	SHEET NO.	TOTAL SHEETS
3	MD	SEE TITLE SHEET		

CONSTRUCTION DETAILS

A. Install signal heads & signs on existing mast arm poles. (Note: Rotate existing lighting arm as shown and remove back guys).

B. Install signal heads on existing mast arm (Note: Re-cable existing street light luminaire).

C. Install 12 in. white permanent preformed pavement marking tape as shown.

D. Install 24 in. white permanent preformed pavement marking tape as shown.

E. Install 6 ft. x 30. quadruple loop detector (3-6-3 turns) encased in flexible tubing and spliced to existing 2 conductor aluminum shielded cable.

F. Install 2 in. PVC schedule 80 electrical conduit trenched prior to construction of driveway apron.

G. Maintain existing loop detector splice to 2 conductor aluminum shielded cables.

H. Install 1 in. liquid tight, flexible, non-metallic conduit for detector wire sleeve.

J. Deleted

K. Install handhole.

L. Install 2 in. PVC schedule 40 electrical conduit - trenched.

M. Install 3 in. PVC schedule 80 electrical conduit - slotted prior to final roadway surface.

N. Install 10 ft. breakaway pedestal, base support system, and signal head as shown (Note: four - 1 in. x 40 in. anchor bolts and one 2 in. PVC schedule 40 conduit bend).

O. Install microloop probe set with 500 ft. lead-in cable.

P. Use existing conduit.

Q. Use existing handhole.

R. Cap and abandon existing conduit.

S. Abandon existing handhole.

T. Abandon existing loop detector.

U. Deleted

V. Install cables into existing controller cabinet.

W. Remove existing steel strain pole and foundation.

X. Remove existing span wire, signal heads, and signs.

Y. Install ground mounted sign.

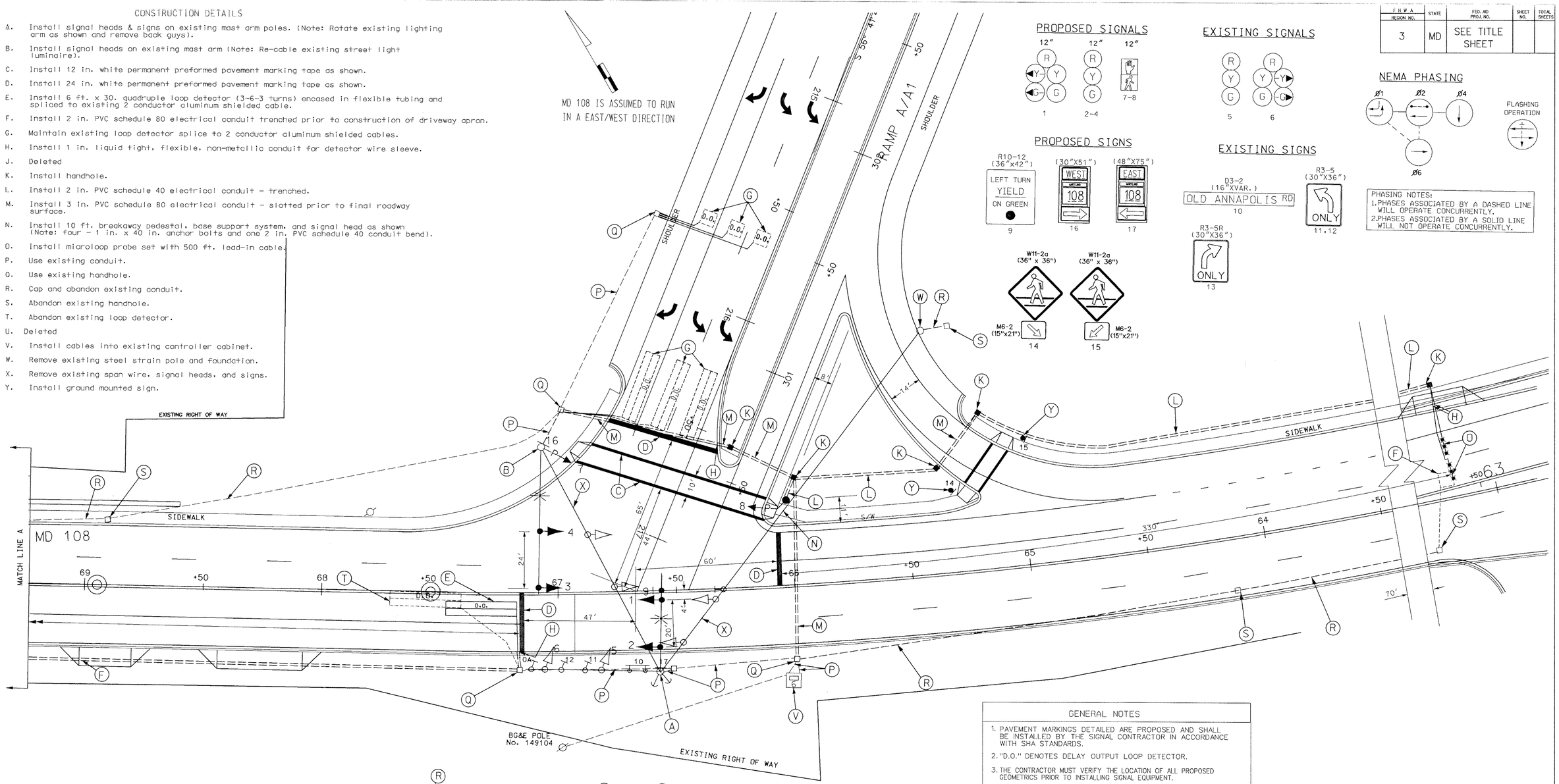

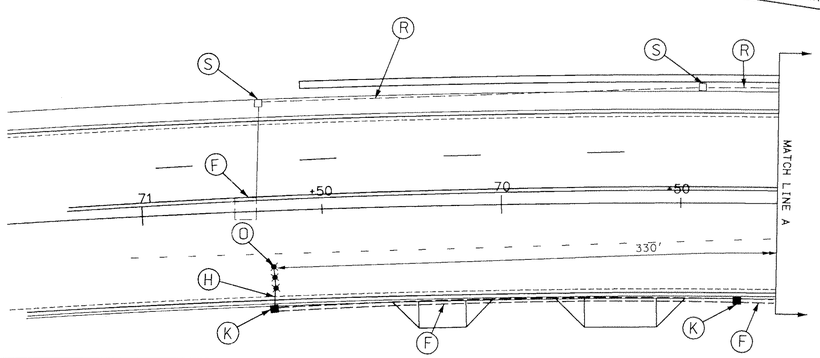

GENERAL NOTES

1. PAVEMENT MARKINGS DETAILED ARE PROPOSED AND SHALL BE INSTALLED BY THE SIGNAL CONTRACTOR IN ACCORDANCE WITH SHA STANDARDS.
2. "D.O." DENOTES DELAY OUTPUT LOOP DETECTOR.
3. THE CONTRACTOR MUST VERIFY THE LOCATION OF ALL PROPOSED GEOMETRICS PRIOR TO INSTALLING SIGNAL EQUIPMENT.
4. THE LOOP DETECTORS MUST BE INSTALLED PRIOR TO THE INSTALLATION OF THE PAVEMENT MARKINGS.
5. ALL PROPOSED TRAFFIC SIGNAL EQUIPMENT SHALL BE INSTALLED TO FINAL GRADE
6. REFER TO M.O.T. PLANS FOR ADDITIONAL ROADWAY PAVEMENT MARKINGS AND SIGNING.

PHASE IV

SIG-16 — SIGNAL #8 ULTIMATE SIGNAL

UTILITY LEGEND

T	TELEPHONE CABLES
G	GAS MAIN
W	WATER MAIN
S	SEWER MAIN
E	ELECTRIC CABLES
A	AERIAL CABLES
BC	BURIED CABLE
SD	STORM DRAIN

GEOMETRIC LEGEND

EXISTING GEOMETRICS

PROPOSED GEOMETRICS

REVISIONS

9 REDLINE REVISION #9 REPLACES SHEET #427

DMP DCI

APPROVALS

ASST. DIVISION CHIEF, TEDD

ASST. DISTRICT ENGINEER, TRAFFIC

CHIEF, TRAFFIC ENGINEERING DESIGN DIVISION

DIRECTOR, OFFICE OF TRAFFIC & SAFETY

DCI CONSULTING ENGINEERS COLUMBIA, MARYLAND

MARYLAND DOT - STATE HIGHWAY ADMINISTRATION

Office of Traffic & Safety

TRAFFIC ENGINEERING DESIGN DIVISION

MD 108 @ RAMP A/A1

LOGMILE #:

DATE 3/15/98

DRAWN BY:	R. CICCHINI	F.A.P. NO.	SEE TITLE SHEET	PLAN SHEET NO.:	SHEET NO.
CHECK BY:		S.H.A. NO.	HO-661-502-770		
SCALE:	1"=20'	COUNTY	HOWARD	TS-3611	427A OF

TC01M100.DGN