F.H.W.A. REGION NO.	STATE	FED. AID PROJ. NO.	SHEET NO.	TOTAL SHEETS
3	MD		1	2

PROJECT DESCRIPTION

I GENERAL

THIS PROJECT INVOLVES THE MODIFICATION TO THE EXISTING TRAFFIC CONTROL SIGNAL AT THE INTERSECTION OF MD 214 AND MD 253 IN ANNE ARUNDEL COUNTY.

MD 214 RUNS IN AN EAST-WEST DIRECTION.

II INTERSECTION OPERATION

THIS INTERSECTION SHALL OPERATE IN A NEMA FULL-TRAFFIC-ACTUATED SIX PHASE OPERATION.
MD 253 WILL BE MODIFIED TO ADD AN EXCLUSIVE/PERMISSIVE LEFT-TURN FOR THE N/B APPROACH.

III SPECIAL NOTE

1. ALL INTERNAL WIRING TO THE CONTROLLER WILL BE PERFORMED BY THE SIGNAL SHOP. CONTACT MR. ED RODENHIZER AT (410) 787-7652, SEVENTY-TWO (72) HOURS IN ADVANCE OF THE INTENDED WORK.

WIRING DIAGRAM

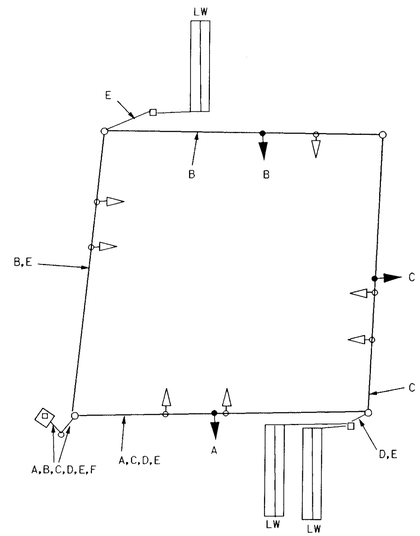

WIRING KEY

A,B,C - 7 CONDUCTOR (NO. 14 AWG) ELECTRICAL CABLE
D,E,F 2-CONDUCTOR ELECTRICAL CABLE (ALUMINUM SHIELDED)
LW LOOP WIRE ENCASED IN FLEXIBLE TUBING

N

A. EQUIPMENT TO BE FURNISHED BY ADMINISTRATION

ITEM NO.	QUANTITY	UNIT	DESCRIPTION
9000	1	EA	NEMA LOAD SWITCH
9000	1	EA	12" ONE-WAY, FIVE-SECTION (R,Y,G,RA,YA) SPAN MOUNTED
9000	2	EA	8"/12" COMBINATION ONE-WAY, FIVE SECTION (12"RA,YA,8"R,Y,G) SPAN MOUNTED
			OVERHEAD MOUNTED SIGNS
9000	18	SF	FLAT SHEET ALUMINUM R10-12 SIGN (1 EACH) 36" X 42" SPAN MOUNTED R3-5(L) (1 EACH) 30" X 36" SPAN MOUNTED

EQUIPMENT LIST

B. EQUIPMENT TO BE FURNISHED / OR INSTALLED BY CONTRACTOR

UNIT	DESCRIPTION	UNIT	DESCRIPTION
1001	1	EA.	MAINTENANCE OF TRAFFIC
1003	1	EA.	MOBILIZATION
5006	1	EA.	F/1 PERMANENT PREFORMED PAVEMENT MARKING ARROW
5013	3	EA.	REMOVE EXISTING PAVEMENT MARKING LETTER OR ARROW
8011	3	EA.	INSTALL SIGNAL HEAD
8021	380	EA.	F/1 SAWCUT FOR SIGNAL (LOOP DETECTOR)
8022	18	LF	F/11" LIQUID TIGHT FLEXIBLE NON-METALLIC CONDUIT FOR DETECTOR SLEEVE
8040	1400	LF	F/1 LOOP WIRE ENCASED IN FLEXIBLE TUBING (NO. 14 AWG)
8041	620	LF	F/12-CONDUCTOR ELECTRICAL CABLE (NO. 14 AWG)
8044	20	LF	F/15-CONDUCTOR ELECTRICAL CABLE (NO. 14 AWG)
8045	520	LF	F/17-CONDUCTOR ELECTRICAL CABLE (NO. 14 AWG)
8054	18	SF	INSTALL OVERHEAD MOUNTED SIGN
8061	1	EA.	REMOVAL AND DISPOSE OF EXISTING MATERIAL AND EQUIPMENT

PHASE CHART

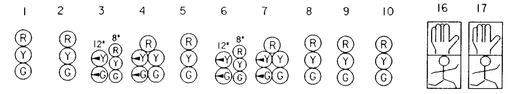

	1	2	3	4	5	6	7	8	9	10	16	17
PHASE 2+5	R	R	G (G)	G (G)	G	R	R	R	R	R	DW	DW
2+5 CHANGE	R	R	Y (G)	Y (G)	G	R	R	R	R	R	DW	DW
PHASE 2+6	G	G	G	G	G	R	R	R	R	R	DW	DW
PED CLEAR	G	G	G	G	G	R	R	R	R	R	DW	DW
2+6 CHANGE	Y	Y	Y	Y	Y	R	R	R	R	R	DW	DW
PHASE 3 & 8	R	R	R	R	R	G (G)	G (G)	G	R	R	DW	DW
3 CHANGE	R	R	R	R	R	Y	Y	Y	R	R	DW	DW
PHASE 4 & 8	R	R	R	R	R	R	G	G	G	G	DW	DW
4 & 8 CHANGE	R	R	R	R	R	R	Y	Y	Y	Y	DW	DW
ALT. PHASE 4	R	R	R	R	R	R	R	R	G	G	WK	WK
PED CLEAR	R	R	R	R	R	R	R	R	G	G	FL/DW	FL/DW
ALT. 4 CHANGE	R	R	R	R	R	R	R	R	Y	Y	DW	DW
FLASHING OPERATION	FL/Y	FL/Y	FL/Y	FL/Y	FL/Y	FL/R	FL/R	FL/R	FL/R	FL/R	DARK	DARK

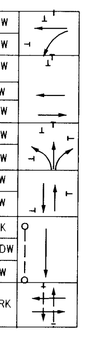

UTILITY LEGEND

—— G —— G ——	GAS MAIN
—— W —— W ——	WATER MAIN
—— S —— S ——	SEWER MAIN
—— E —— E ——	ELECTRIC CABLES
—— A —— A ——	AERIAL CABLES
—— T —— T ——	TELEPHONE CABLES

REVISIONS	APPROVALS
(D) INSTALL E/P LEFT-TURN FOR N/B CENTRAL SCHOOL COMPLEX. 7/98	ORIGINAL
MEL	CHIEF, SIGNAL DESIGN SECTION
C INSTALL SCHOOL SPEED LIMIT HB'S 1-27-98	ON
DJD	ASST. DISTRICT ENGINEER, TRAFFIC
B RECUT EB LOOPS DUE TO LANE CHANGES SHA NO. BW-661-802-512	FILE
	CHIEF, TRAFFIC ENGINEERING DESIGN DIVISION
	DIRECTOR, OFFICE OF TRAFFIC & SAFETY

MDOT - STATE HIGHWAY ADMINISTRATION
Office of Traffic & Safety
TRAFFIC ENGINEERING DESIGN DIVISION

LOG MILE NO. 02021406.68

DRAWN BY: G.FISH/DJ DODA
DES. BY: D.J.DODA
CHK. BY: AL BUDNICHUK

MD 214 AND MD 253

COUNTY: HOWARD

DATE: 7-25-77
SCALE: 1" - 20'
F.A.P. NO.
S.H.A. NO. 23855T2507535
TS/STD. NO. TS-1522D GI
SHEET NO. 2 OF 2

E:\bgn\vassoa\q214-253.dgn Jul. 15, 1998 08:37:55