PROJECT DESCRIPTION

GENERAL

THIS PROJECT INVOLVES THE MODIFICATION OF THE EXISTING TRAFFIC CONTROL SIGNAL AT US 1 & LAUREL SHOPPING CENTRE IN PRINCE GEORGE'S COUNTY. THE MODIFICATIONS CONSIST OF INSTALLING NEW LOOP DETECTORS ON THE SOUTH EAST AND WEST LEGS OF THE INTERSECTION DUE TO NEW GEOMETRICS AND PAVEMENT MARKINGS ALONG US ROUTE 1.

INTERSECTION OPERATION

THIS INTERSECTION OPERATES IN A NEMA FIVE PHASE, SEMI-TRAFFIC-ACTUATED MODE, WITH THE NORTHBOUND AND SOUTHBOUND US 1 MOVEMENTS OPERATING CONCURRENTLY AND THE EASTBOUND AND WESTBOUND MOVEMENTS OPERATING CONCURRENTLY. A PEDESTRIAN PHASE IS PROVIDED ALONG THE SOUTH LEG OF THE INTERSECTION THERE IS A SIGNAL PRE-EMPTION PHASE PROVIDED ON THE SOUTH LEG OF THE INTERSECTION.

PROJECT CONTACTS

THE CONTACT PERSONS FOR DISTRICT # 3 ARE AS FOLLOWS:

MR. CHARLIE WATKINS
DISTRICT ENGINEER
PHONE: (301)-513-7300

MR. AUGIE REBISH
UTILITY ENGINEER
PHONE: (301)-513-7350

MR. MAJID SHAKIB
ASSISTANT DISTRICT ENGINEER - TRAFFIC
PHONE: (301)-513-7358

MR. RANDY BROWN
ASSISTANT DISTRICT ENGINEER - MAINTENANCE
PHONE: (301)-513-7304

EQUIPMENT LIST "B"

B. EQUIPMENT FURNISHED AND/OR INSTALLED BY THE CONTRACTOR.

CATEGORY CODE NO.	QUANTITY	DESCRIPTION
585620	150 L.F.	FURNISH AND INSTALL 12 INCH HEAT APPLIED WHITE PERMANENT PREFORMED THERMOPLASTIC PAVEMENT MARKINGS
585624	150 L.F.	FURNISH AND INSTALL 24 INCH HEAT APPLIED WHITE PERMANENT PREFORMED THERMOPLASTIC PAVEMENT MARKINGS
801605	7.5 S.F.	FURNISH AND INSTALL SHEET ALUMINUM SIGNS TO CONSIST OF: - 1 EACH R3-5R (RIGHT ONLY) (30"X36") - SPAN MOUNT
805160	50 L.F.	FURNISH AND INSTALL 1 INCH LIQUID-TIGHT, FLEXIBLE NON-METALLIC CONDUIT DETECTOR SLEEVE
861104	700	FURNISH AND INSTALL ELECTRICAL CABLE - 2 CONDUCTOR ALUMINUM SHIELDED (NO. 14 A.W.G.)
862101	4000 L.F.	FURNISH AND INSTALL LOOP WIRE ENCASED IN FLEXIBLE TUBING
862102	850 L.F.	FURNISH AND INSTALL SAW CUT FOR SIGNAL
800000	LS	REMOVE AND DISPOSE OF EXISTING EQUIPMENT

WIRING DIAGRAM

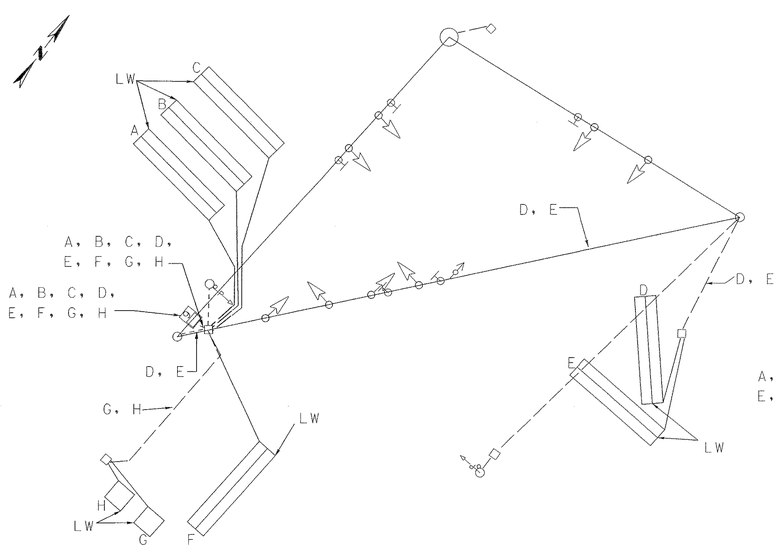

WIRING LEGEND

LW — LOOP WIRE (NO 14 A.W.G.)
A, B, C, D, E, F, G, H — 2-CONDUCTOR (ALUMINUM SHIELDED) (NO 14 AWG)

PHASE CHART

	1	2	3	4	5	6	7	8	9	10
PHASE 1 & 6	G	G	R	R	R	R	R	R	DW	DW
1 & 6 CHANGE	G	G	R	R	R	R	R	R	DW	DW
PHASE 2 & 6	G	G	G	G	R	R	R	R	DW	DW
2 & 6 CHANGE	Y	Y	Y	Y	R	R	R	R	DW	DW
PHASE 4 & 8	R	R	R	R	G	G	G	G	DW	DW
4 & 8 CHANGE	R	R	R	R	Y	Y	Y	Y	DW	DW
ALT 4 & 8	R	R	R	R	G	G	G	G	W	W
PED CLEAR	R	R	R	R	G	G	G	G	FL / DW	FL / DW
ALT 4 & 8 CHANGE	R	R	R	R	Y	Y	Y	Y	DW	DW
PRE-EMPTION PHASE	G	G	R	R	R	R	R	R	DW	DW
PRE-EMPTION CHANGE	Y	Y	R	R	R	R	R	R	DW	DW
FLASHING OPERATION	FL / R	FL / R	FL / Y	FL / Y	FL / R	FL / R	FL / R	FL / R	DARK	DARK

TSP-4 OF TSP-17

KCI TECHNOLOGIES

KCI TECHNOLOGIES INC.
ENGINEERS AND PLANNERS
10 NORTH PARK DRIVE
HUNT VALLEY, MARYLAND
21030-1888
(410) 316-7800

REVISIONS	
C	REVISED DUE TO NEW GEOMETRICS AND PAVEMENT MARKINGS PG2735171
AH	
B	REVISED DUE TO NEW DRIVE ON EAST SIDE 10-87
A	8-15-79 REVISED POLE SIGNAL LOCATIONS. DELETED ONE POLE
JWG	

APPROVALS

TEAM LEADER, TRAFFIC ENGINEERING DESIGN DIVISION
ASST. CHIEF TRAFFIC ENGINEERING DESIGN DIVISION
CHIEF, TRAFFIC ENGINEERING DESIGN DIVISION
DIRECTOR, TRAFFIC & SAFETY

ORIGINAL ON FILE

MARYLAND DOT - STATE HIGHWAY ADMINISTRATION
Office of Traffic & Safety
TRAFFIC ENGINEERING DESIGN DIVISION
US 1 OAK STREET TO TALBOTT AVENUE (MD 198)
GENERAL INFORMATION SHEET
US RTE. 1 @ LAUREL CENTRE PLAZA
(MONTGOMERY WARDS/THERMALINK)

DRAWN BY:	A. HOTTENSTEIN	F.A.P. NO.	SEE TITLE SH.	TS NO. 1629C	SHEET NO.
CHECKED BY:	J. LAWRENCE	S.H.A. NO.	PG2745184		
SCALE:	NONE	COUNTY:	PRINCE GEORGE'S	T.I.M.S. NO.	116 OF 162
DATE:	11/99	LOG MILE:	16000113.38		

1/17/00 10:20:45 AM G:\PLOTTING\PS7\OCP\MYLAR_HP.dgn Aaron Hottenstein Division: TRANSPORTATION m:\1996\019607\5\sp02lau.prt