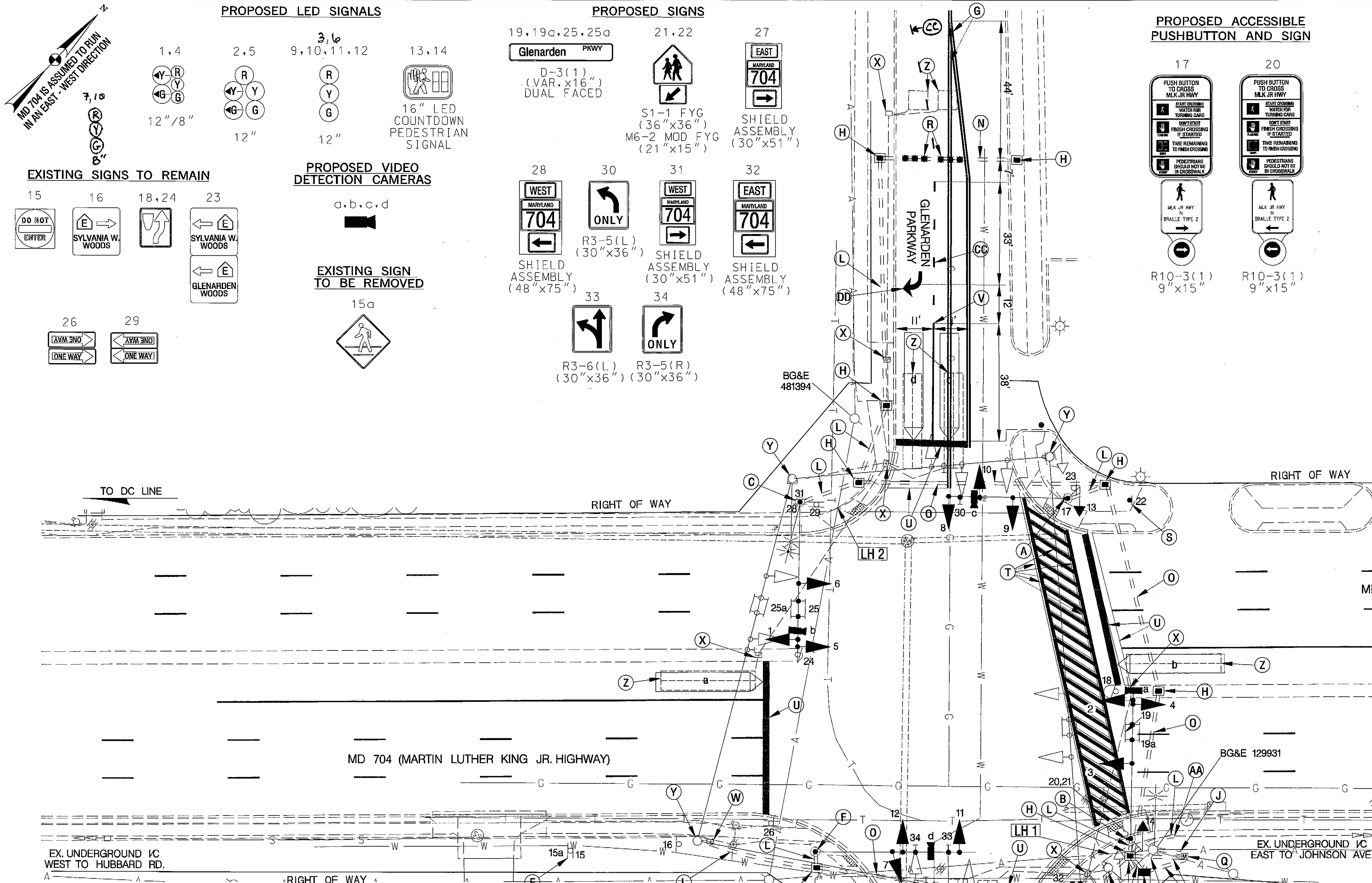

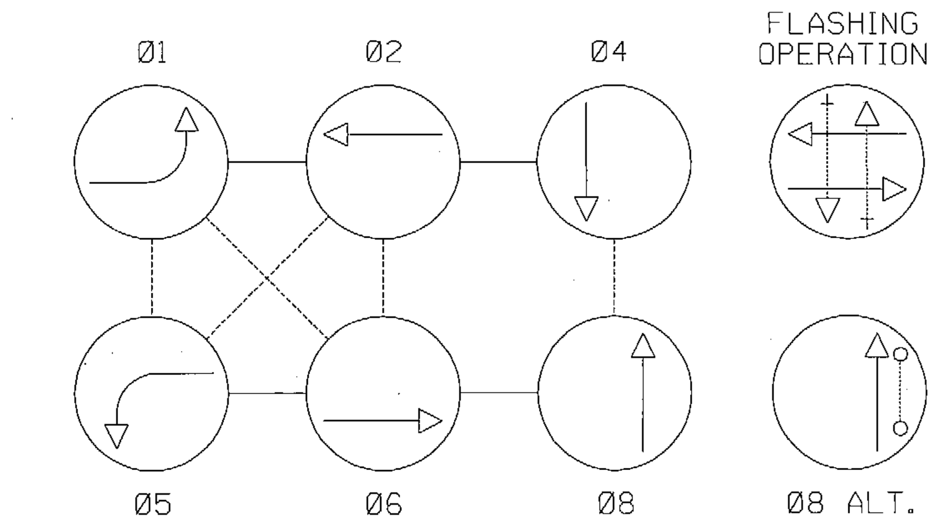

NOTE:
PHASES ASSOCIATED BY A DASHED LINE MAY/WILL OPERATE CONCURRENTLY.
PHASES ASSOCIATED BY A SOLID LINE WILL NOT OPERATE CONCURRENTLY.

LINE HEIGHTS (LH) 1	
COMMUNICATION 1	- 22'-1"
COMMUNICATION 2	- 22'-10"
COMMUNICATION 3	- 23'-7"
COMMUNICATION 4	- 24'-11"
SPAN WIRE	- 27'-5"
GUY WIRE 1	- 28'-6"
GUY WIRE 2	- 30'-3"
SECONDARY	- 30' +
PRIMARY	- 35' +

LINE HEIGHTS (LH) 2	
COMMUNICATION 1	- 21'-4"
GUY WIRE	- 22'-5"
SPAN WIRE	- 22'-6"
COMMUNICATION 2	- 23'-4"
SECONDARY	- 27'-7"
PRIMARY	- 30' +

TOD NO:XX444-19
SHA NO:PG718A55/B55
MD 704 @ GLENARDEN PKWY

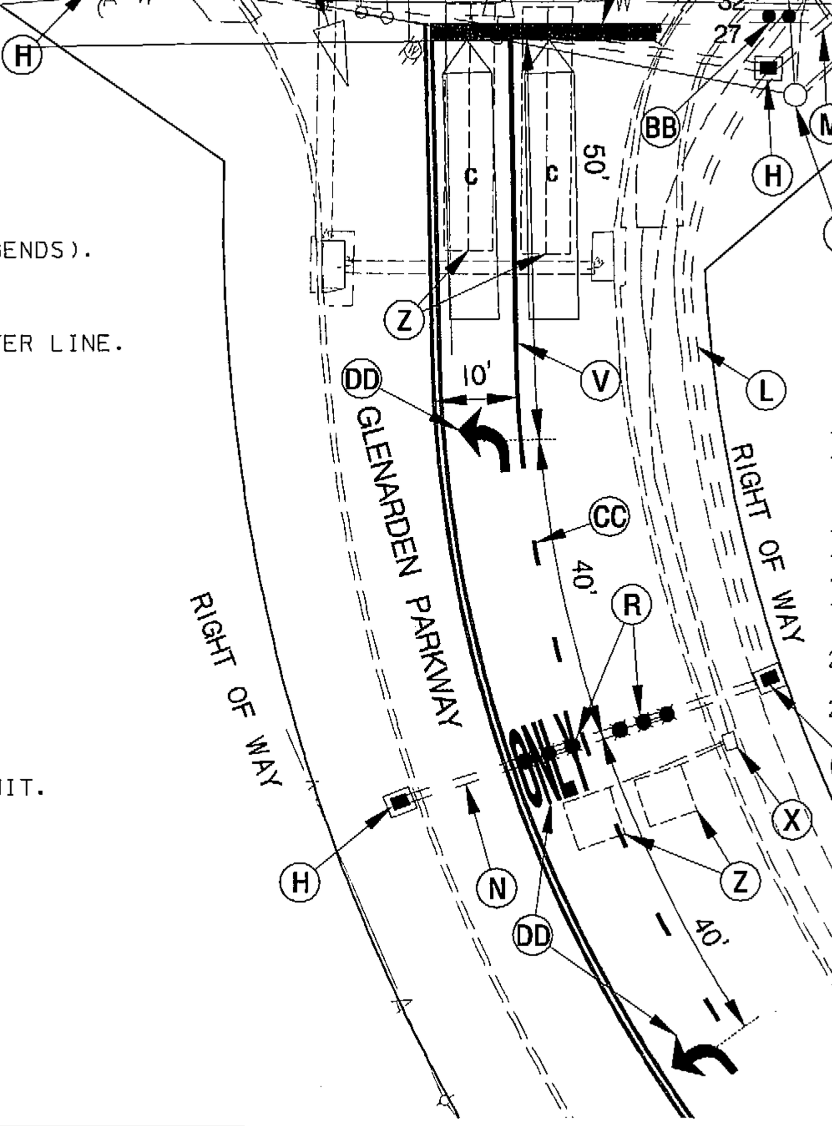

GENERAL NOTES

1. MAINTENANCE OF TRAFFIC WILL BE HANDLED BY THE CONTRACTOR UTILIZING MDSHA STANDARD TYPICALS FOR TRAFFIC CONTROL.
2. THE CONTRACTOR SHALL CONTACT MISS UTILITY TO VERIFY ALL UNDERGROUND UTILITIES PRIOR TO THE INSTALLATION OF PROPOSED SIGNAL EQUIPMENT. IF ANY UTILITY CONFLICTS ARISE THE CONTRACTOR SHALL CONTACT THE PROJECT ENGINEER.
3. WITHIN 36 IN. OF UNDERGROUND UTILITY LOCATIONS, THE CONTRACTOR SHALL BE REQUIRED TO EXCAVATE FOR FOUNDATION AND CONDUIT BY HAND.
4. ALL TRAFFIC SIGNAL FOUNDATIONS SHALL BE INSTALLED AT THE FINAL SIDEWALK OR CURB GRADE FOR CLOSED SECTIONS, HIGHEST ROADWAY PROFILE GRADE FOR OPEN SECTIONS, TO MEET CLEARANCES AS SPECIFIED IN MD 816.03, MD 818.01, MD 818.02, MD 818.04. THE CONTRACTOR SHALL VERIFY ULTIMATE GRADES PRIOR TO THE INSTALLATION OF ALL SIGNAL EQUIPMENT.
5. THE SHA SIGNAL SHOP WILL BE RESPONSIBLE FOR ALL INTERNAL CABINET WIRING. THE CONTRACTOR SHALL BE RESPONSIBLE FOR ROUTING AND PROPERLY LABELING ALL SIGNAL CABLES.
6. THE CONTRACTOR SHALL REMOVE AND DISPOSE OF ALL ABANDONED ELECTRICAL CABLES.
7. ALL EXISTING TRAFFIC SIGNAL EQUIPMENT REMOVED SHALL BECOME THE PROPERTY OF THE SIGNAL CONTRACTOR UPON COMPLETION OF THE SIGNAL RECONSTRUCTION.
8. THE CONTRACTOR SHALL VERIFY THE PROPOSED POLE AND CABINET LOCATION(S) PRIOR TO INSTALLATION.
9. THE CONTRACTOR SHALL CENTER THE PROPOSED CROSSWALKS ON THE EXISTING RAMPS.
10. LOCATION OF ACCESSIBLE PEDESTRIAN SIGNAL PUSHBUTTONS MUST MEET LOCATION REQUIREMENTS OF MUTCD SEC. 4E.09 AND FIG. 4E.2; AND THE NCHRP PUBLICATION, "ACCESSIBLE PEDESTRIAN SIGNALS: GUIDE TO BEST PRACTICE." IF NOT MET, THE CONTRACTOR IS TO STOP WORK ON PUSHBUTTON LOCATIONS UNTIL THE CONFLICT HAS BEEN RESOLVED. IF NEEDED, A DESIGN WAIVER SHALL BE OBTAINED, APPROVED BY THE DIRECTOR, OFFICE OF TRAFFIC AND SAFETY.
11. PUSHBUTTONS ARE TO BE LOCATED SO THAT THEY CAN BE ACTIVATED BY A PERSON IN A WHEELCHAIR REACHING LESS THAN 18 IN. FROM A 60 IN. X 60 IN. LEVEL LANDING AREA WITH A CROSS SLOPE OF LESS THAN OR EQUAL TO 2%.
12. PUSHBUTTON ARROWS ARE TO BE PARALLEL TO THE CROSSING FOR WHICH THEY ARE INTENDED.
13. ALL ACCESSIBLE PEDESTRIAN CONTROL EQUIPMENT SHALL BE DELIVERED TO THE SHA SIGNAL SHOP FOR TESTING AND PROGRAMMING PRIOR TO INSTALLATION. CONTACT MR. EDWARD RODENHIZER AT 410-787-7650 TO COORDINATE.
14. THE CONTRACTOR SHALL REMOVE AND REPLACE CONCRETE SIDEWALK AT THE NEAREST JOINT.
15. SEE GENERAL INFORMATION SHEET FOR CABINET, SIGNAL POLE(S), APS ASSOCIATED SIGNAL HEADS AND PUSHBUTTONS, VIDEO DETECTION CAMERA, TRAFFIC SIGNAL HEAD, CROSSWALK, STOPLINE AND SIGN LAYOUTS.
16. ALL PAVEMENT MARKINGS SHALL BE INSTALLED IN ACCORDANCE WITH MDSHA STANDARDS.
17. VIDEO CAMERA LOCATION/ALIGNING SHALL BE COORDINATED WITH THE SHA ENGINEER.
18. ALL PROPOSED LUMINAIRES SHALL BE SUPPLIED WITH A PHOTOCELL.
19. THE CONTRACTOR SHALL ENSURE THE EXISTING TRAFFIC SIGNAL REMAINS OPERATIONAL UNTIL RECONSTRUCTED TRAFFIC SIGNAL IS OPERATIONAL.
20. THE CONTRACTOR SHALL REFER TO FIGURE 3B-17a OF THE 2006 MARYLAND M.U.T.C.D. FOR CROSSWALK PAVEMENT MARKING DETAIL.
21. THE CONTRACTOR SHALL INTEGRATE PROPOSED POLE FOUNDATIONS WITH THE EXISTING SIDEWALK WHERE NECESSARY.

CONSTRUCTION DETAILS

A. INSTALL A 27 FT. STEEL POLE WITH A 38 FT. MAST ARM, FOUNDATION, LED TRAFFIC SIGNAL HEADS, VIDEO DETECTION CAMERA, SIGNS, LED COUNTDOWN PEDESTRIAN SIGNAL HEAD, ACCESSIBLE PEDESTRIAN PUSHBUTTON AND SIGN R10-3(1) TO READ "PUSHBUTTON TO CROSS MLK JR HWY" (NOTE: 1-3 IN. PVC 90 DEGREE BEND).
B. INSTALL A 16.5 FT. STEEL POLE WITH A 15 FT. "T" DIMENSION, 50 FT.MAST ARM, FOUNDATION, LED TRAFFIC SIGNAL HEADS, VIDEO DETECTION CAMERA, SIGNS, LED COUNTDOWN PEDESTRIAN SIGNAL HEAD, ACCESSIBLE PEDESTRIAN PUSHBUTTON AND SIGN R10-3(1) TO READ "PUSHBUTTON TO CROSS MLK JR HWY" (NOTE: 1-3 IN. PVC 90 DEGREE BEND).
C. INSTALL A 27 FT. STEEL POLE WITH A 50 FT.MAST ARM, FOUNDATION, LED TRAFFIC SIGNAL HEADS, VIDEO DETECTION CAMERA, SIGNS AND 15 FT. LIGHTING ARM WITH 250 WATT HPS LUMINAIRE (NOTE: 1-3 IN. PVC 90 DEGREE BEND).
D. INSTALL NEMA SIZE "6" BASE MOUNTED CABINET AND CONTROLLER WITH ALL NECESSARY EQUIPMENT. (NOTE: 2-2 IN., AND 2-4 IN. 90 DEGREE BENDS).
E. REMOVE EXISTING GROUND MOUNTED SIGN 15a ONLY. SIGN 15 AND WOOD POST SHALL REMAIN.
F. INSTALL A 27 FT. STEEL POLE WITH A 50 FT. MAST ARM, FOUNDATION, LED TRAFFIC SIGNAL HEADS, VIDEO DETECTION CAMERA, SIGNS. (NOTE: 1-3 IN. PVC 90 DEGREE BEND).
G. REMOVE EXISTING PAVEMENT MARKINGS AND INSTALL 150 FT. OF 5 IN. DOUBLE YELLOW PREFORMED THERMOPLASTIC PAVEMENT MARKINGS FOR CENTER LINE.
H. INSTALL ELECTRICAL HANDHOLE.
J. INSTALL 4 IN. SCHEDULE 80 RIGID PVC ELECTRICAL CONDUIT (TRENCHED) - FOR PROPOSED UNDERGROUND POWER SERVICE. CAP AND MARK CONDUIT, AND LEAVE A 1 FT. STUB WITH PULL STRING AT UTILITY POLE FOR USE BY OTHERS.
K. INSTALL 2 IN. SCHEDULE 80 RIGID PVC ELECTRICAL CONDUIT (TRENCHED).
L. INSTALL 3 IN. SCHEDULE 80 RIGID PVC ELECTRICAL CONDUIT (TRENCHED).(NOTE: REPLACE SIDEWALK WHERE NECESSARY).
M. INSTALL 4 IN. SCHEDULE 80 RIGID PVC ELECTRICAL CONDUIT (TRENCHED).
N. INSTALL 3 IN. SCHEDULE 80 RIGID PVC ELECTRICAL CONDUIT (BORED). (NOTE: REPLACE SIDEWALK WHERE NECESSARY).
O. INSTALL 4 IN. SCHEDULE 80 RIGID PVC ELECTRICAL CONDUIT (SLOTTED).
P. INSTALL 2 IN. SCHEDULE 80 RIGID PVC ELECTRICAL CONDUIT (TRENCHED) - FOR PROPOSED UNDERGROUND TELEPHONE SERVICE. CAP AND MARK CONDUIT, AND LEAVE A 1 FT. STUB WITH PULL STRING AT UTILITY POLE FOR USE BY OTHERS.
Q. INSTALL METERED SERVICE PEDESTAL (NOTE: 2-2 IN. AND 1-4 IN. 90 DEGREE PVC BENDS).
R. INSTALL NON-INVASIVE MICROLOOP PROBE SET.
S. INSTALL GROUND MOUNTED SIGN ON ONE 4 IN. x 6 IN. WOOD POST.
T. REMOVE EXISTING PAVEMENT MARKINGS AND INSTALL 12 IN. WHITE PREFORMED THERMOPLASTIC PAVEMENT MARKINGS FOR CROSSWALK.
U. REMOVE EXISTING PAVEMENT MARKINGS AND INSTALL 24 IN. WHITE PREFORMED THERMOPLASTIC PAVEMENT MARKINGS FOR STOPLINE.
V. INSTALL 5 IN. WHITE LEAD FREE REFLECTIVE THERMOPLASTIC PAVEMENT MARKINGS.
W. USE EXISTING HANDHOLE. PULL BACK AND REROUTE EXISTING INTERCONNECT CABLE.
X. REMOVE EXISTING HANDHOLE. CAP AND ABANDON EXISTING CONDUIT(S) AT THE NEAREST HANDHOLES.
Y. REMOVE EXISTING TRAFFIC SIGNAL EQUIPMENT. REMOVE FOUNDATION 12 IN. BELOW GRADE AND BACKFILL. CAP AND ABANDON ANY EXISTING CONDUIT.
Z. ABANDON EXISTING LOOP DETECTOR.
AA. INTERCEPT EXISTING CONDUIT. PULL BACK AND REROUTE EXISTING INTERCONNECT CABLE.
BB. INSTALL GROUND MOUNTED SIGNS ON TWO 4 IN. X 6 IN. WOODS POSTS.
CC. INSTALL 5 IN. WHITE LEAD FREE REFLECTIVE THERMOPLASTIC PAVEMENT MARKINGS (3'-9'-3')
DD. INSTALL HEAT APPLIED WHITE PERMANENT PREFORMED THERMOPLASTIC PAVEMENT MARKING ARROW/LETTERS.

STV Incorporated
engineers /architects /planners /construction managers
7125 Ambassador Road Baltimore, MD 21244-2722 (410) 944-9112

UTILITY LEGEND

—E—E—	ELECTRIC CABLES	—SD—SD—	STORM DRAIN
—A—A—	AERIAL CABLES	—G—G—	GAS MAIN
—T—T—	TELEPHONE CABLES	—W—W—	WATER MAIN
—F—F—	FIBER-OPTIC	—S—S—	SEWER MAIN

APPROVALS
TEAM LEADER
ASST. DIV. CHIEF
DIVISION CHIEF
OFFICE DIRECTOR

ORIGINAL ON FILE

REVISIONS
Ⓓ FULL SIGNAL RECONSTRUCTION
SHA NO. XX4445185 12/2008
STV VGN CJW [initials] TP 2/10
C AS-BUILT
SHA NO. P-408-001-385

STATE OF MARYLAND
DEPARTMENT OF TRANSPORTATION
STATE HIGHWAY ADMINISTRATION
OFFICE OF TRAFFIC & SAFETY
TRAFFIC ENGINEERING DESIGN DIVISION

MD 704 (MARTIN LUTHER KING JR. HIGHWAY)
AND GLENARDEN PARKWAY

TRAFFIC SIGNALIZATION PLAN

SCALE 1" = 20' ADVERTISED DATE 10-12-72 CONTRACT NO. P-408-001-385

DESIGNED BY		COUNTY	PRINCE GEORGE'S
DRAWN BY	W. RICHARDSON	LOGMILE	16070403.61
CHECKED BY		TIMS NO.	I-525
F.A.P. NO.		TOD NO.	

TS NO. 548D | DRAWING SG-01 OF 02 | SHEET NO. 1 OF 2

PLOTTED: Monday, February 09, 2009 AT 01:09 PM
FILE: I:\PROJECTS\0312513\0312513_0083\Drawings\TRA\pSG-P000_md704.dgn