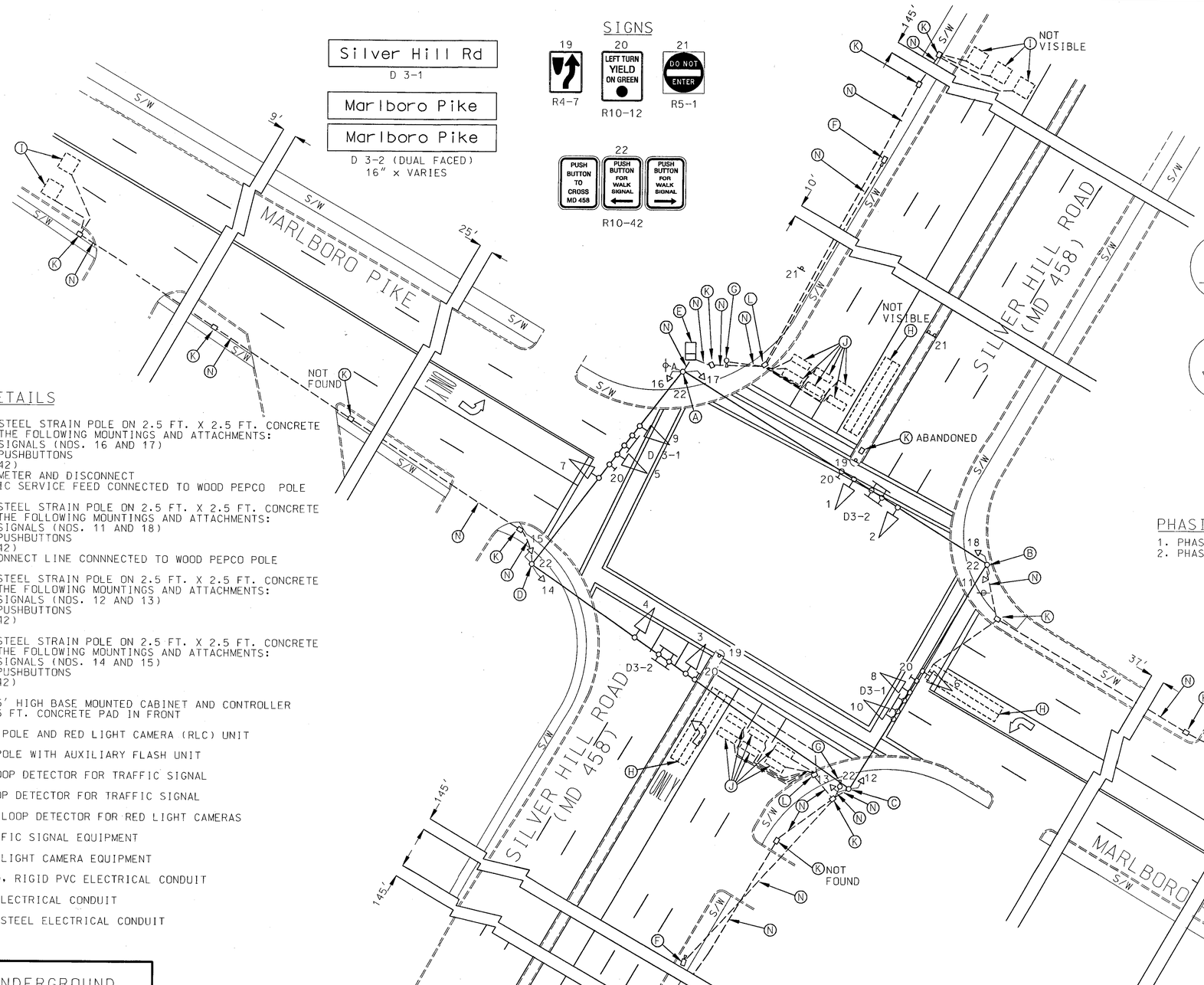

EQUIPMENT DETAILS

A. 12 IN. X 30 FT. STEEL STRAIN POLE ON 2.5 FT. X 2.5 FT. CONCRETE FOUNDATION WITH THE FOLLOWING MOUNTINGS AND ATTACHMENTS:
- -TWO PEDESTRIAN SIGNALS (NOS. 16 AND 17)
- -TWO PEDESTRIAN PUSHBUTTONS
- -TWO SIGNS (R10-42)
- -ELECTRIC POWER METER AND DISCONNECT
- -OVERHEAD ELECTRIC SERVICE FEED CONNECTED TO WOOD PEPCO POLE

B. 12 IN. X 30 FT. STEEL STRAIN POLE ON 2.5 FT. X 2.5 FT. CONCRETE FOUNDATION WITH THE FOLLOWING MOUNTINGS AND ATTACHMENTS:
- -TWO PEDESTRIAN SIGNALS (NOS. 11 AND 18)
- -TWO PEDESTRIAN PUSHBUTTONS
- -TWO SIGNS (R10-42)
- -OVERHEAD INTERCONNECT LINE CONNNECTED TO WOOD PEPCO POLE

C. 12 IN. X 26 FT. STEEL STRAIN POLE ON 2.5 FT. X 2.5 FT. CONCRETE FOUNDATION WITH THE FOLLOWING MOUNTINGS AND ATTACHMENTS:
- -TWO PEDESTRIAN SIGNALS (NOS. 12 AND 13)
- -TWO PEDESTRIAN PUSHBUTTONS
- -TWO SIGNS (R10-42)

D. 12 IN. X 30 FT. STEEL STRAIN POLE ON 2.5 FT. X 2.5 FT. CONCRETE FOUNDATION WITH THE FOLLOWING MOUNTINGS AND ATTACHMENTS:
- -TWO PEDESTRIAN SIGNALS (NOS. 14 AND 15)
- -TWO PEDESTRIAN PUSHBUTTONS
- -TWO SIGNS (R10-42)

E. 2.2' X 3.6' X 4.5' HIGH BASE MOUNTED CABINET AND CONTROLLER WITH 4 FT. BY 4.5 FT. CONCRETE PAD IN FRONT

F. 12 FT. MOTORIZED POLE AND RED LIGHT CAMERA (RLC) UNIT

G. 9 FT. BREAKAWAY POLE WITH AUXILIARY FLASH UNIT

H. 6 FT. X 30 FT. LOOP DETECTOR FOR TRAFFIC SIGNAL

I. 6 FT. X 6 FT. LOOP DETECTOR FOR TRAFFIC SIGNAL

J. 40 IN. X 100 IN. LOOP DETECTOR FOR RED LIGHT CAMERAS

K. HANDHOLE FOR TRAFFIC SIGNAL EQUIPMENT

L. HANDHOLE FOR RED LIGHT CAMERA EQUIPMENT

M. 4 IN. SCHEDULE 80, RIGID PVC ELECTRICAL CONDUIT

N. 2 IN. RIGID PVC ELECTRICAL CONDUIT

O. 2 IN. GALVANIZED STEEL ELECTRICAL CONDUIT

NEMA PHASING

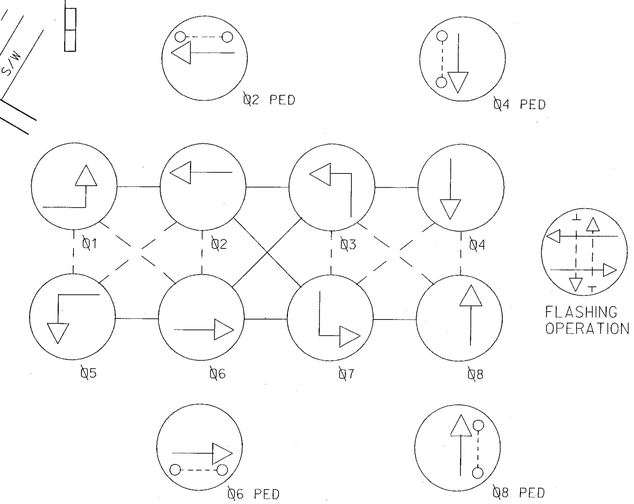

PHASING NOTES :

1. PHASES ASSOCIATED BY A SOLID LINE WILL NOT OPERATE CONCURRENTLY.
2. PHASES ASSOCIATED BY A DASHED LINE WILL OPERATE CONCURRENTLY.

SIGNALS

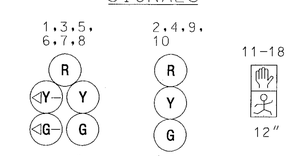

LEGEND OF UNDERGROUND AND OVERHEAD UTILITIES

GAS MAIN	----- G ----- G -----
WATER MAIN	----- W ----- W -----
SEWER MAIN	----- S ----- S -----
ELECTRIC CABLES	----- E ----- E -----
AERIAL CABLES	——— A ——— A ———
TELEPHONE CABLE	----- T ----- T -----
STORM DRAINAGE	----- D ----- D -----
CABLE TV	-----TV-----TV-----

REVISIONS					
AS-BUILT					
C.W.	D.P.	E.V.	F.M.	W.C.	5/02

APPROVALS

TEAM LEADER, TRAFFIC ENGINEERING DESIGN DIVISION

ASST. CHIEF TRAFFIC ENGINEERING DESIGN DIVISION

CHIEF, TRAFFIC ENGINEERING DESIGN DIVISION

DIRECTOR, TRAFFIC & SAFETY

ORIGINAL ON FILE

MARYLAND DOT - STATE HIGHWAY ADMINISTRATION

Office of Traffic & Safety

TRAFFIC ENGINEERING DESIGN DIVISION

MD 458 (SILVER HILL ROAD)
AT MARLBORO PIKE

DRAWN BY:	F.A.P. NO.	TS NO. 1879-B	SHEET NO.
CHECKED BY:	S.H.A. NO.		
SCALE: 1"=20'	COUNTY: PRINCE GEORGE'S	T.I.M.S. NO.	1 OF 1
DATE:	LOG MILE:		

E:\Marlborough\SilverHillRd-1.dgn
08/21/02