F.H.W.A. REGION NO.	STATE	FED. AID PROJ. NO.	SHEET NO.	TOTAL SHEETS
3	MD	SEE BELOW	2	2

PROJECT DESCRIPTION

1. GENERAL

THIS PROJECT INVOLVES THE INSTALLATION OF STREET LIGHTING AND PAVEMENT MARKINGS AT THE INTERSECTION OF MD 214 AND ADDISION PLAZA SHOPPING CENTER IN PRINCE GEORGE'S COUNTY.

2. INTERSECTION OPERATION

THE INTERSECTION CURRENTLY OPERATES IN A NEMA SIX-PHASE, FULL-TRAFFIC ACTUATED MODE. EXCLUSIVE-PERMISSIVE LEFT-TURN PHASING FOR BOTH DIRECTIONS OF MD 214. THE SIDE STREETS ARE SPLIT A CONCURRENT PEDESTRIAN PHASE FOR CROSSING THE SPUR OF MD 332 EXISTS AND ALTERNATE PEDESTRIAN PHASE FOR CROSSING THE EAST APPROACH OF MD 214 EXISTS.

EQUIPMENT LIST

A. EQUIPMENT TO BE SUPPLIED BY ADMINISTRATION.

ITEM	QUANTITY	DESCRIPTION
9000	1 EA.	2 CHANNEL LOOP AMPILIFIER
9000	10.6 S.F.	ASSOCIATED SHIELDED ASSEMBLY M3-2 (24" x 12"), M1-6 (30" x 24"), M6-1 (21" x 15"), SIGN #22 - POLE MOUNTED
9000	25 S.F.	ASSOCIATED SHIELDED ASSEMBLY M3-2 (30" x 15"), M1-6 (36" x 36"), M6-1 (30" x 24"), SIGN #23 - GROUND MOUNTED
9000	10.6 S.F.	ASSOCIATED SHIELDED ASSEMBLY M3-2 (24" x 12"), M1-6 (30" x 24"), M6-1 (21" x 15"), SIGN #24 - POLE MOUNTED
9000	25 S.F.	ASSOCIATED SHIELDED ASSEMBLY M3-2 (30" x 15"), M1-6 (36" x 36"), M6-1 (30" x 24"), SIGN #25 - GROUND MOUNTED

B. EQUIPMENT IS TO BE FURNISHED/INSTALLED BY THE CONTRACTOR.

ITEM	QUANTITY	DESCRIPTION
1001	1 EA.	MAINTENANCE OF TRAFFIC
2005	7 CY.	REMOVAL OF EXISTING SIDEWALK
2006	60 LF.	REMOVAL OF EXISTING COMBINATION CURB AND GUTTER
5003	695 LF.	F & I 12" WHITE PERMANENT PREFORMED PAVEMENT MARKING TAPE
5005	150 LF.	F & I 24" WHITE PERMANENT PREFORMED PAVEMENT MARKING TAPE
5008	500 LF.	REMOVE EXISTING PAVEMENT MARKINGS - ANY WIDTH
6001	195 SF.	F & I 4" CONCRETE SIDEWALK
6002	55 LF.	F & I STANDARD TYPE A COMBINATION CURB AND GUTTER
8022	245 LF.	F & I SAWCUT FOR SIGNAL (LOOP DETECTOR)
8024	10 LF.	F & I 1" LIQUID TIGHT FLEXIBLE NON - METALLIC CONDUIT FOR DETECTOR SLEEVE
8026	135 LF.	F & I 2" SCHEDULE 80 RIGID PVC CONDUIT - SLOTTED
8035	2 EA.	F & I ELECTRICAL HANDHOLE
8043	865 LF.	F & I LOOP WIRE EXCASED IN FLEXIBLE TUBING (NO. 14 AWG)
8044	360 LF.	F & I ELECTRICAL CABLE - 2 CONDUCTOR (ALUMINUM SHIELDED)
8049	310 LF.	F & I ELECTRICAL CABLE - 2 CONDUCTOR (NO. 12 AWG)
8054	17 LF.	F & I 4" x 4" WOOD SIGN SUPPORT
8056	35.6 SF.	INSTALL GROUND MOUNTED SIGN
8057	35.6 SF.	INSTALL OVERHEAD MOUNTED SIGN
8059	2 EA.	F & I 250 WATT HPS LUMINAIRE AND PHOTOCELL
8060	2 EA.	F & I LIGHTING BRACKET ARM FOR TRAFFIC SIGNAL STRUCTURE
8067	1 EA.	USE EXISTING PLAN OR DISK AND AS-BUILT TRAFFIC CONTROL DEVICE

WIRING DIAGRAM

LW - LOOP WIRE

A,B 2 - CONDUCTOR CABLE - ALUMINUM SHIELDED (NO. 14 AWG)

D,E 2 - CONDUCTOR ELECTRICAL CABLE - (NO. 12 AWG) TRAY CABLE

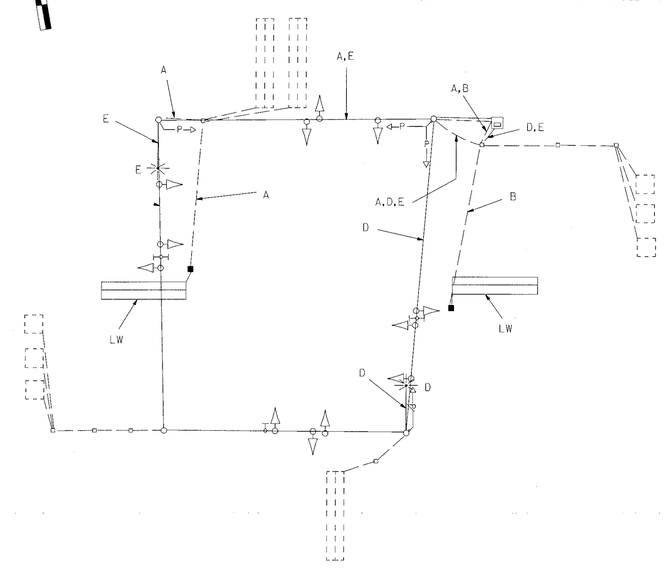

PHASE CHART

	1	2	3	4	5	6	7	8	9	10	11	12	13-14	15-16
Phase 1 & 5	◄G-R	◄G-R	R	◄G-R	◄G-R	R	R	R	R	R	R	R	DW	DW
1 & 5 Change	THE CONTROLLER MAY SKIP TO PHASES 1 & 6 OR 2 & 5 OR 2 & 6													
Phase 1 & 6	◄G-G	◄G-G	G	R	R	R	R	R	R	R	R	R	DW	DW
1 Change	◄Y-G	◄Y-G	G	R	R	R	R	R	R	R	R	R	DW	DW
Phase 2 & 5	R	R	R	◄G-G	◄G-G	G	R	R	R	R	R	R	DW	DW
5 Change	R	R	R	◄Y-G	◄Y-G	G	R	R	R	R	R	R	DW	DW
Phase 2 & 6	G	G	G	G	G	G	R	R	R	R	R	R	WK	DW
Ped. Clear	G	G	G	G	G	G	R	R	R	R	R	R	FL/DW	DW
2 & 6 Change	Y	Y	Y	Y	Y	Y	R	R	R	R	R	R	DW	DW
Phase 3	R	R	R	R	R	R	◄G-G	◄G-G	G	R	R	R	DW	DW
3 Change	R	R	R	R	R	R	◄Y-Y	◄Y-Y	Y	R	R	R	DW	DW
Phase 4	R	R	R	R	R	R	R	R	R	◄G-G	◄G-G	G	DW	DW
4 Change	R	R	R	R	R	R	R	R	R	◄Y-Y	◄Y-Y	Y	DW	DW
3 Alt.	R	R	R	R	R	R	◄G-G	◄G-G	G	R	R	R	DW	WK
Ped. Clear	R	R	R	R	R	R	◄G-G	◄G-G	G	R	R	R	DW	FL/DW
3 Alt. Change	R	R	R	R	R	R	Y	Y	Y	R	R	R	DW	DW
Flashing Operation	FL/Y	FL/Y	FL/Y	FL/Y	FL/Y	FL/Y	FL/R	FL/R	FL/R	FL/R	FL/R	FL/R	Dark	Dark

REVISIONS
A — SHA NO.: 23835T4506,300 W. ADD STREET LIGHTING, SIGNING, STOPLINES AND CROSSWALKS. 2/20/96

APPROVALS

ORIGINAL ON FILE

ASST. DIVISION CHIEF, TEDD

ASST. DISTRICT ENGINEER, TRAFFIC

CHIEF, TRAFFIC ENGINEERING DESIGN DIVISION

DIRECTOR, OFFICE OF TRAFFIC & SAFETY

MARYLAND DOT - STATE HIGHWAY ADMINISTRATION

Office of Traffic & Safety

TRAFFIC ENGINEERING DESIGN DIVISION

MD 214 AND ADDISON PLAZA S.C. / SPUR TO MD 332

DATE 7/25/86

DRAWN BY: S. THACKER	F.A.P. NO. BW 898-801-312	PLAN SHEET NO.: TS-2278A	SHEET NO. 2 OF 2
CHECK BY: D. DODA	S.H.A. NO. N/A		
SCALE: 1"-20'	COUNTY PRINCE GEORGE'S		

LOG # 16021400.68