FHWA REGION NO.	STATE	FED. AID PROJ. NO.	SHEET NO.	TOTAL SHEETS
3	MD			

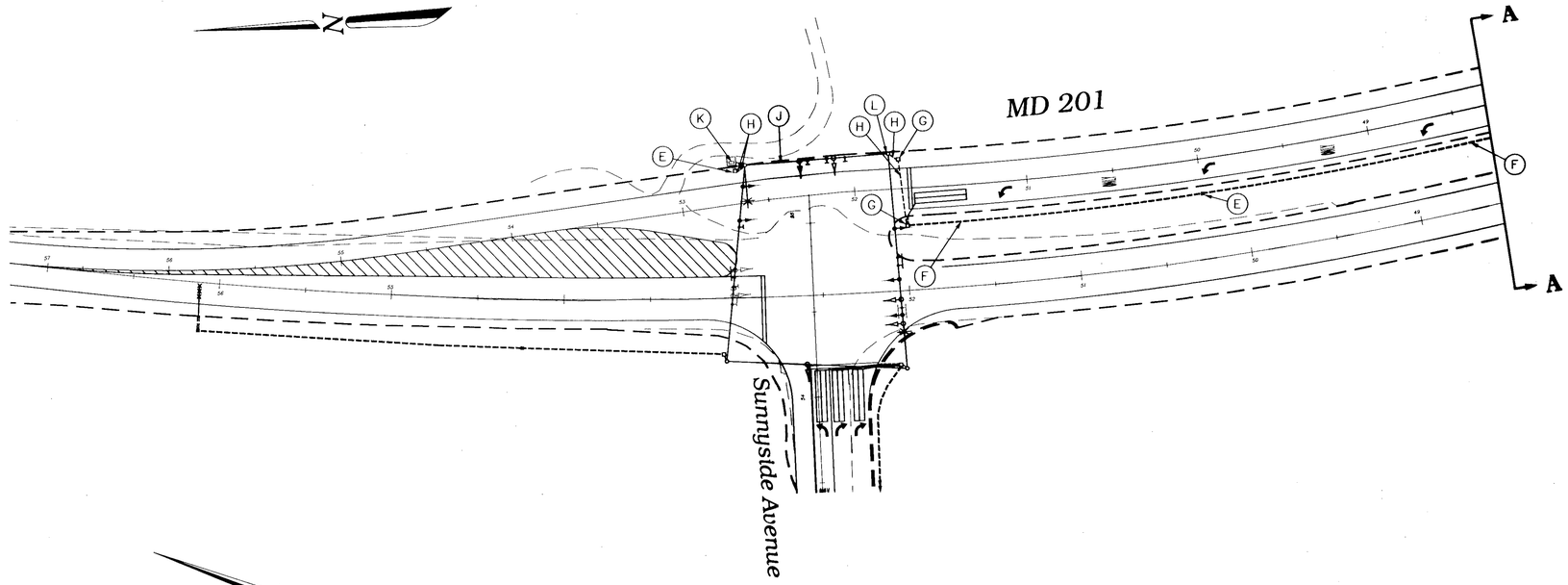

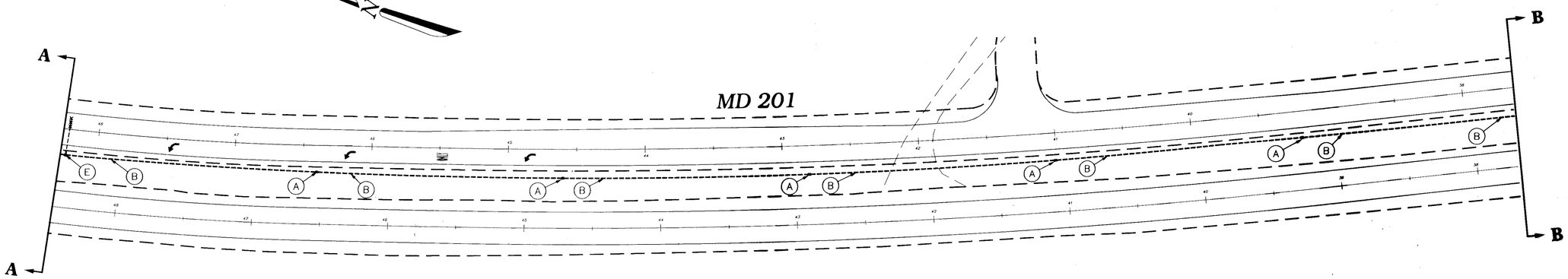

The Traffic Group

The Traffic Group, Inc.
Suite 600
40 W. Chesapeake Avenue
Towson, Maryland 21204
410-583-8485
1-800-583-8411
Fax 410-321-8458
Job No. 960809
ICLGN

CONSTRUCTION DETAILS

A. Install handhole.
B. Install 2 in. polyvinyl chloride [Schedule 40] electrical conduit - trenched.
C. Install 2 in. polyvinyl chloride [Schedule 80] electrical conduit - pushed.
D. Attach 2 in. polyvinyl chloride [Schedule 80] electrical conduit to the outside of the culvert parapet wall.
E. Handhole installed under individual Traffic Signal Plan.
F. Conduit installed under individual Traffic Signal Plan.
G. Use existing handhole.
H. Use existing conduit.
J. Use existing span wire.
K. Install interconnect cable to traffic signal controller.
L. Use existing steel strain pole.

GEOMETRIC LEGEND

EXISTING GEOMETRICS
PROPOSED GEOMETRICS

UTILITY LEGEND

G — GAS MAIN
W — WATER MAIN
S — SEWER MAIN
E — ELECTRIC CABLES
D — STORM DRAIN
A — AERIAL CABLES
T — TELEPHONE CABLES

REVISIONS

APPROVALS

ASST. DIVISION CHIEF TRAFFIC ENGINEERING DESIGN DIVISION

CHIEF, TRAFFIC ENGINEERING DESIGN DIVISION

ASST. DISTRICT ENGINEER - TRAFFIC

DIRECTOR, OFFICE OF TRAFFIC & SAFETY

MDOT - STATE HIGHWAY ADMINISTRATION
Office of Traffic & Safety
TRAFFIC ENGINEERING DESIGN DIVISION

DRAWN BY: Frank Hoeckel/ J. Storck
DES. BY: Frank Hoeckel
CHK. BY: M. Rodin

(Interconnect Plan)
MD 201 from Sunnyside Avenue to Cherrywood Lane

COUNTY: PRINCE GEORGE'S
LOG MILE + 16020708.85

DATE: November 5, 1997
SCALE: 1" = 40'
F.A.P. NO. N/A
S.H.A. NO.
TS/STD. NO. 1164X1
SHEET NO. 5 of 7