SIGNAL DISPLAY

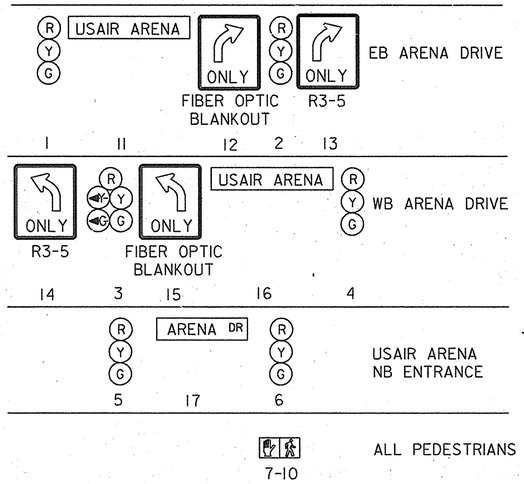

LOOP WIRING			
P32		P34	
CHANNEL	ϕ/LOOP	CHANNEL	ϕ/LOOP
1	2a	1	2b
2	-	2	-
3	6a	3	6b
4	8a	4	-
P36			
CHANNEL	ϕ/LOOP		
1	5a/Aux5		
2	-		
3	-		
4	8b/Aux8		

NEMA PHASING

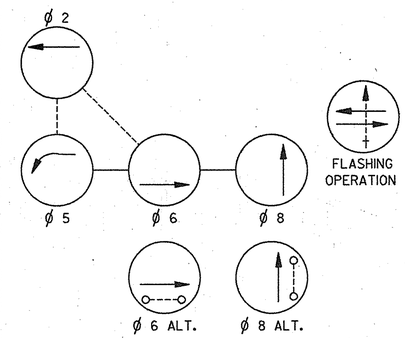

1. Phases associated by a solid line will not operate concurrently.
2. Phases associated by a dashed line will operate concurrently.

NOTE:

SIGNAL EQUIPMENT TO BE SUPPLIED BY PRINCE GEORGE'S COUNTY AND INSTALLED BY THE CONTRACTOR:

SHEET ALUMINUM SIGNS TO CONSIST OF:

1 (EA) - 144"x 24" D3-2 SIGN (ROAD NAME PANEL) "USAIR ARENA" WITH PROPER HARDWARE FOR SPAN WIRE MOUNT.

2 (EA) - 144"x 24" D3-2 SIGN (ROAD NAME PANEL) "ARENA DR." WITH PROPER HARDWARE FOR SPAN WIRE MOUNT.

1 (EA) - EIGHT PHASE CONTROLLER AND CABINET - BASE MOUNT.

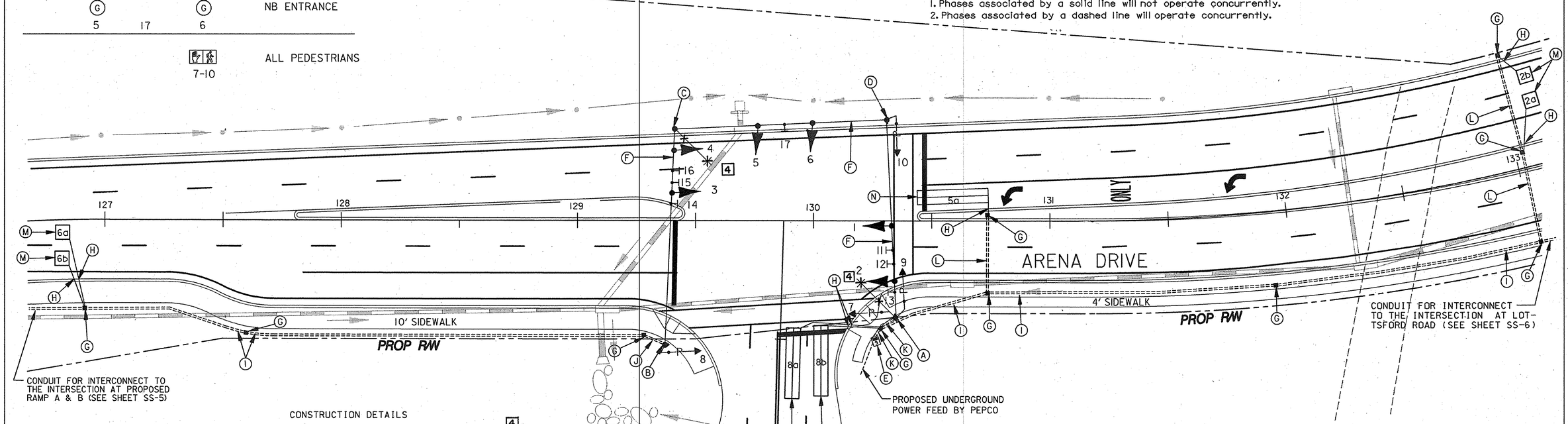

CONSTRUCTION DETAILS

A. Install 30' galvanized strain pole, ~~20' lighting arm and luminaire,~~ pedestrian signal heads and push buttons as shown (NOTE: 2-3" PVC 90 degree angle conduit bend). 4

B. Install 30' galvanized strain pole, pedestrian signal head and push button as shown (NOTE: 1-3" PVC 90 degree angle conduit bend).

C. Install 30' galvanized strain pole, ~~20' lighting arm and luminaire~~ (NOTE: 1-3" PVC 90 degree angle conduit bend). 4

D. Install 30' galvanized strain pole; pedestrian signal head and push button (NOTE: 1-3" PVC 90 degree angle conduit bend).

E. Install traffic signal controller in base-mounted cabinet and all necessary equipment for traffic signal and underground electrical service (with the meter mounted on the cabinet)(NOTE: 1-2" PVC 90 degree angle conduit bend, 2-3" PVC 90 degree angle conduit bend).

F. Install span wire, vehicular signal heads, signs and all necessary wiring.

G. Install handbox.

H. Install 1" electrical conduit detector wire sleeve (one per loop).

I. Install 2" schedule 40 electrical conduit-trenched.

J. Install 3" schedule 40 electrical conduit-trenched.

K. Install 2-3" schedule 40 electrical conduit-trenched.

L. Install 3" schedule 80 electrical conduit-trenched.

M. Install 6'x 6' loop detector (3 turns).

N. Install 6'x 30' loop detector, quadrupole type (2-4-2 turns).

SS-3

DEPARTMENT OF PUBLIC WORKS AND TRANSPORTATION
PRINCE GEORGE'S COUNTY, MARYLAND

TRAFFIC SIGNAL PLAN
ARENA DR. @ USAIR ARENA ENTRANCE

RUMMEL, KLEPPER & KAHL
CONSULTING ENGINEERS
81 MOSHER STREET
BALTIMORE, MARYLAND 21217
TELE:(410)728-2900 FAX:(410)728-2992

REVISIONS:
4 REV. 6/24/97

SCALE: 1"=20'
DWG. 143 OF 188
APPROVED 8/21/96 DATE
FOR BETTY HAGEN FRANCIS, DIRECTOR
DESIGNED: Z.A.J.
DRAWN: Z.A.J.
CHECKED: 8/19/96 MPR
APPRVED:
CHIEF HIGHWAYS AND BRIDGES 8/20/96 DATE
PROJECT NO. P-189-Z-172
ROAD NO. JOB NO.
FILE NO.

08/14/96 08:52:16
g:\redskins\ardr\dgn\ss02ardr.dgn (ss02ardr.prf)