EXISTING SIGNALS TO BE REMOVED

EXISTING CAMERAS TO BE REMOVED

MD 410 IS ASSUMED TO RUN IN THE EAST- WEST DIRECTION

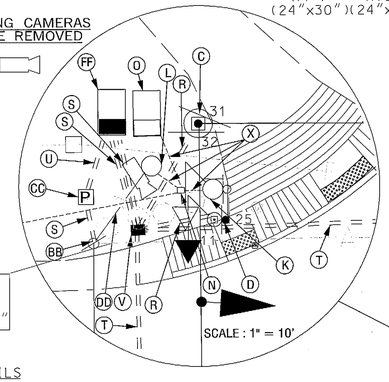

GUY WIRE = 22'-6"
GUY WIRE = 25'-0"
SECONDARY = 27'-6"

EXISTING SIGNS TO REMAIN

33 R4-7 (24"x30")

34 R10-7 (24"x30") DO NOT BLOCK INTERSECTION

35 Larry Place

W2-2R (30"x30")

D-3(2) (VAR.x16")

EXISTING SIGNS TO BE REMOVED

SHARE THE ROAD

Meadowbrook LN 8300

PROPOSED VIDEO DETECTION

a, b, c, d

PROPOSED L.E.D. SIGNALS

1-10 12"

11-14 16" LED COUNTDOWN PEDESTRIAN SIGNAL

25, 27 PUSH BUTTON TO CROSS EAST- WEST HWY

26, 28 PUSH BUTTON TO CROSS EAST- WEST HWY

R10-3(1) 9" x 15"

R10-3(1) 9" x 15"

PROPOSED SIGNS

17 Meadowbrook LN 8300

18 Meadowbrook LN 8300

19 Meadowbrook LN 8200

20 Meadowbrook LN 8200

21 East-West HWY 2800

22 East-West HWY 2800

23 East-West HWY 2800

24 East-West HWY 2800

D-3(1) (VAR.x16")

29 EAST MARYLAND 410 SHIELD ASSEMBLY (30"x51")

30 EAST MARYLAND 410 SHIELD ASSEMBLY (48"x75")

31 WEST MARYLAND 410 SHIELD ASSEMBLY (30"x51")

32 WEST MARYLAND 410 SHIELD ASSEMBLY (48"x75")

NEMA PHASING

02 04 06 08 04 ALT. 08 ALT. FLASHING OPERATION

NOTE:
PHASES ASSOCIATED BY A DASHED LINE WILL OPERATE CONCURRENTLY. PHASES ASSOCIATED BY A SOLID LINE WILL NOT OPERATE CONCURRENTLY.

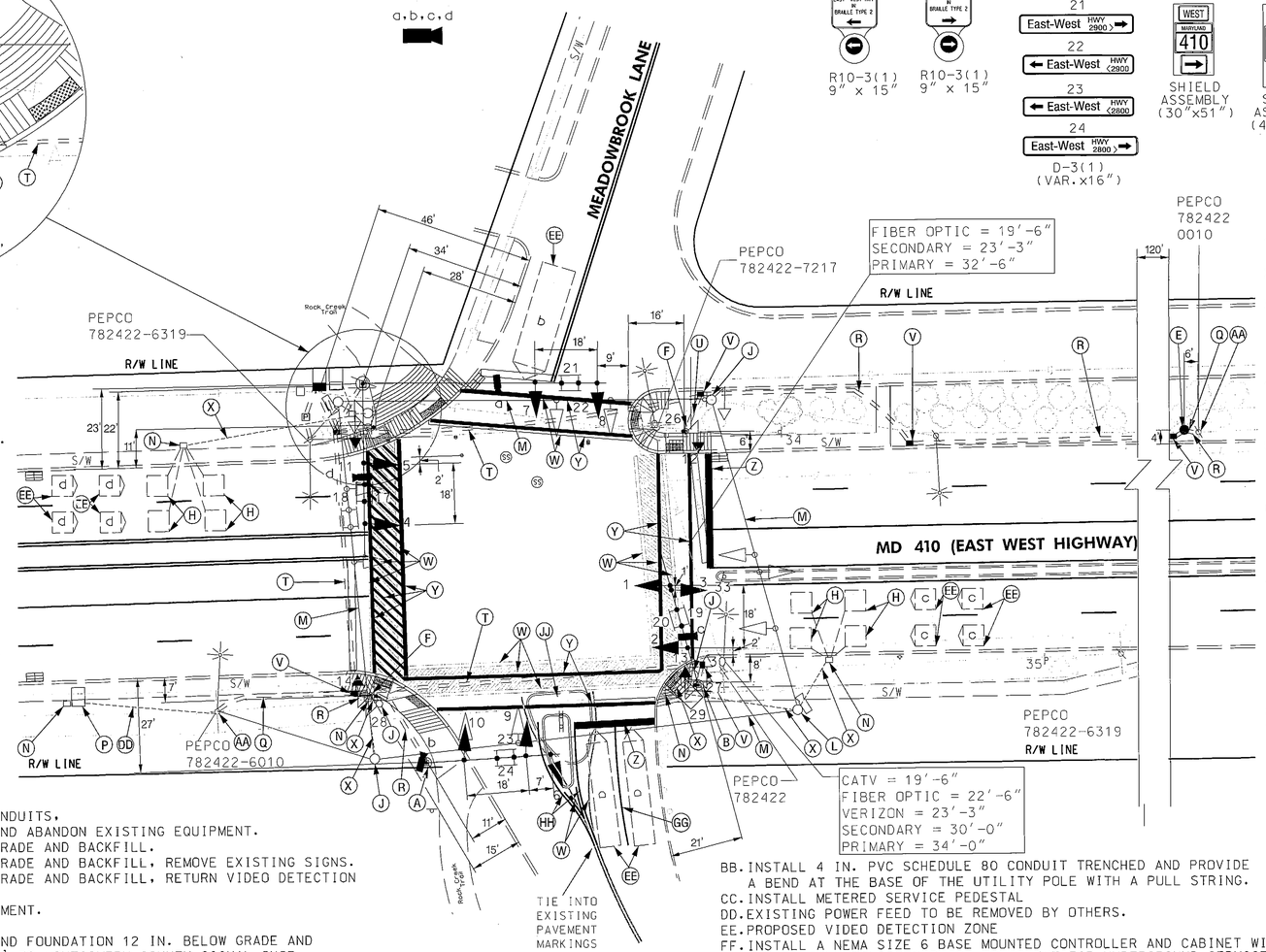

CONSTRUCTION DETAILS

A. INSTALL CONCRETE FOUNDATION FOR A 27 FT STEEL POLE WITH A 38 FT MAST ARM, OVERHEAD VIDEO DETECTION CAMERA, SIGNS AND TRAFFIC SIGNAL HEADS. (NOTE: ONE 3 IN. PVC SCHEDULE 80 CONDUIT BEND)
B. INSTALL CONCRETE FOUNDATION FOR A 16' 6" STEEL POLE (STD. NO. 813.13-01) WITH A 38 FT MAST ARM, PEDESTRIAN SIGNAL HEADS, AUDIBLE TACTILE PUSHBUTTON STATION AND SIGN, OVERHEAD VIDEO DETECTION CAMERAS, SIGNS AND TRAFFIC SIGNAL HEADS. SEE GENERAL NOTE 11. (NOTE: ONE 3 IN. PVC SCHEDULE 80 CONDUIT BEND)
C. INSTALL CONCRETE FOUNDATION FOR A 27 FT. STEEL POLE (CUT TO 23 FT) WITH TWIN 50/70 FT MAST ARMS (MD STD. NO. 818.09), TRAFFIC SIGNAL HEADS, SIGNS AND OVERHEAD VIDEO DETECTION CAMERAS. (NOTE: ONE 3 IN. PVC SCHEDULE 80 CONDUIT BEND)
D. INSTALL CONCRETE FOUNDATION FOR 10 FT. STEEL PEDESTAL POLE WITH BREAKAWAY BASE, PEDESTRIAN SIGNAL HEADS, AUDIBLE TACTILE PUSHBUTTON STATION AND SIGN (NOTE: ONE 3 IN. PVC SCHEDULE 80 CONDUIT BEND).
E. INSTALL CONCRETE FOUNDATION FOR 10 FT. STEEL PEDESTAL POLE (CUT TO 5 FT) AND INSTALL MONTGOMERY COUNTY SPLICE CABINET WITH A SLIP FITTER TO BE SUPPLIED BY MONTGOMERY COUNTY (NOTE: TWO 3 IN. PVC SCHEDULE 80 CONDUIT BEND).
F. INSTALL MODIFIED PEDESTAL POLE BASE (MD 801.01) FOR 10' PEDESTAL POLE WITH BREAKAWAY COUPLINGS (MD818.16-01), COUNTDOWN PEDESTRIAN SIGNAL HEAD, AUDIBLE TACTILE PUSHBUTTON STATION AND SIGN. (NOTE: ONE 2 IN. PVC SCHEDULE 80 CONDUIT BEND).
G. OMITTED.
H. DISCONNECT AND REMOVE LOOP DETECTOR CABLES FROM CONDUITS, HANDHOLES, SIGNAL STRUCTURES AND CONTROLLER. CAP AND ABANDON EXISTING EQUIPMENT.
J. REMOVE EXISTING POLE AND FOUNDATION 12 IN. BELOW GRADE AND BACKFILL.
K. REMOVE EXISTING POLE AND FOUNDATION 12 IN. BELOW GRADE AND BACKFILL, REMOVE EXISTING SIGNS.
L. REMOVE EXISTING POLE AND FOUNDATION 12 IN. BELOW GRADE AND BACKFILL, RETURN VIDEO DETECTION CAMERAS TO MONTGOMERY COUNTY SIGNAL SHOP.
M. REMOVE EXISTING SPAN WIRE AND ALL ASSOCIATED EQUIPMENT.
N. REMOVE EXISTING HANDHOLE.
O. REMOVE EXISTING BASE MOUNTED CONTROLLER, CABINET AND FOUNDATION 12 IN. BELOW GRADE AND BACKFILL. RETURN CABINET [AND ASSOCIATED EQUIPMENT] TO MONTGOMERY COUNTY SIGNAL SHOP.
P. REMOVE EXISTING BASE MOUNTED CABINET AND FOUNDATION 12 IN. BELOW GRADE AND BACKFILL. RETURN CABINET [AND ASSOCIATED EQUIPMENT] TO MONTGOMERY COUNTY SIGNAL SHOP.
Q. INSTALL 3 IN. PVC SCHEDULE 80 ELECTRICAL CONDUIT - TRENCHED WITH A 3 IN CONDUIT BEND AT THE BASE OF THE UTILITY POLE.
R. INSTALL 3 IN. PVC SCHEDULE 80 ELECTRICAL CONDUIT - TRENCHED.
S. INSTALL 4 IN. PVC SCHEDULE 80 ELECTRICAL CONDUIT - TRENCHED.
T. INSTALL 4 IN. PVC SCHEDULE 80 ELECTRICAL CONDUIT - BORED.
U. INSTALL 2 IN. PVC SCHEDULE 80 ELECTRICAL CONDUIT - TRENCHED.
V. INSTALL HANDHOLE.
W. REMOVE EXISTING CROSSWALK INCLUDING HATCHES.
X. CAP AND ABANDON EXISTING CONDUIT.
Y. INSTALL 12 IN. HEAT APPLIED, WHITE PERMANENT PREFORMED THERMOPLASTIC PAVEMENT MARKING FOR CROSSWALKS.
Z. INSTALL 24 IN. HEAT APPLIED, WHITE PERMANENT PREFORMED THERMOPLASTIC PAVEMENT MARKING FOR STOPBAR.
AA. PULL BACK INTERCONNECT CABLE, DEAD END THEN RUN DOWN WOOD POLE USING A 3" ELECTRICAL CONDUIT PVC RISER.
BB. INSTALL 4 IN. PVC SCHEDULE 80 CONDUIT TRENCHED AND PROVIDE A BEND AT THE BASE OF THE UTILITY POLE WITH A PULL STRING.
CC. INSTALL METERED SERVICE PEDESTAL
DD. EXISTING POWER FEED TO BE REMOVED BY OTHERS.
EE. PROPOSED VIDEO DETECTION ZONE
FF. INSTALL A NEMA SIZE 6 BASE MOUNTED CONTROLLER AND CABINET WITH ELECTRICAL UTILITY SERVICE EQUIPMENT FOR UNDERGROUND SERVICE. (NOTE: TWO-4 IN. PVC, AND TWO-2 IN. SCHEDULE 80 CONDUIT BENDS)
GG. INSTALL 5 IN. HEAT APPLIED WHITE PERMANENT PREFORMED THERMOPLASTIC PAVEMENT MARKING FOR LANE LINES.
HH. INSTALL 5 IN. HEAT APPLIED YELLOW PERMANENT PREFORMED THERMOPLASTIC PAVEMENT MARKING FOR LANE LINES.
JJ. INSTALL AGGREGATE FOR BASE COURSE AND HOT MIX ASPHALT FOR PAVED SURFACE TO PATCH AREA AS NECESSARY.

GENERAL NOTES

1. VIDEO CAMERA LOCATION/ALIGNING SHALL BE COORDINATED WITH THE SHA ENGINEER.
2. THE CONTRACTOR SHALL VERIFY ALL PROPOSED POLE AND CABINET LOCATIONS PRIOR TO INSTALLATION.
3. FOR FINAL PAVEMENT MARKINGS REFER TO THE PAVEMENT MARKING PLANS, OTHER THAN THOSE DETAILED ON THE PLAN. ALL PAVEMENT MARKINGS SHALL BE INSTALLED IN ACCORDANCE WITH MSHA STANDARDS.
4. ALL EXISTING TRAFFIC SIGNAL EQUIPMENT REMOVED SHALL BECOME THE PROPERTY OF THE SIGNAL CONTRACTOR UPON COMPLETION OF THE NEW SIGNAL.
5. THE CONTRACTOR SHALL BE RESPONSIBLF FOR TERMINATING ALL SIGNAL CABLE TO THE APPROPRIATE TERMINALS AND PROPERLY LABEL EACH CABLE.
6. THE CONTRACTOR SHALL VERIFY ALL UNDERGROUND UTILITIES PRIOR TO INSTALLING PROPOSED SIGNAL EQUIPMENT. IF ANY UTILITY CONFLICTS SHOULD ARISE THE CONTRACTOR SHALL CONTACT THE PROJECT ENGINEER.
7. ALL TRAFFIC SIGNAL FOUNDATIONS SHALL BE INSTALLED AT THE FINAL SIDEWALK OR CURB GRADE FOR CLOSED SECTIONS, HIGHEST ROADWAY PROFILE GRADE FOR OPEN SECTIONS, TO MEET CLEARANCES AS SPECIFIED IN MD 816.03, MD 818.01, MD 818.02, MD 818.04 .THE CONTRACTOR SHALL VERIFY ULTIMATE GRADES PRIOR TO THE INSTALLATION OF ALL SIGNAL EQUIPMENT.
8. EXISTING INTERCONNECT AND FIBER ARE LASHED TOGETHER.
9. SEE SHEET NO. 2 OF 3 FOR HANDICAP RAMP DETAILS.
10. SEE SHEET 2 OF 3 FOR APS NOTES.
11. SEE SHEET 2 OF 3 FOR FULL DEPTH PAVEMENT DETAIL FOR EXCAVATED ISLAND ON THE SOUTH LEG OF THE INTERSECTION.
12. THE CONTRACTOR SHALL SET THE POLE AT A SUFFICIENT ANGLE TO PROVIDE A MINIMUM OF 24 INCHES OF CLEARANCE TO THE COMMUNICATION CABLE THAT RUNS PARALLEL TO MD 410 AND THE COMMUNICATION CABLE THAT RUNS ACROSS MD 410.
13. THE CONTRACTOR WILL COORDINATE THE RELOCATION OF THE SIGN IN THE ISLAND TO THE PROPOSED ISLAND ALONG THE SOUTH LEG OF THE INTERSECTION WITH THE MARYLAND CAPITAL PARK AND PLANNING COMMISSION. CONTACT: MR. JOHN BOYD TEL: (301)650-2628

GEOMETRIC LEGEND

EXISTING
PROPOSED

UTILITY LEGEND

SD	STORM DRAIN
G	GAS MAIN
W	WATER MAIN
S	SEWER MAIN
E	ELECTRIC CABLES
A	AERIAL CABLES
T	TELEPHONE CABLES
F	FIBER-OPTIC

TOD NO:XX445-18
SHA NO:MO206A53/B53
MD 410 @ MEADOW BROOK LA

BRUDIS & ASSOCIATES, INC.
Consulting Engineers
9220 Rumsey Road; Suite 110
Columbia, Maryland 21045
Phone 410-884-3607
www.brudis.com

APPROVALS: TEAM LEADER, ASST. DIV. CHIEF, DIVISION CHIEF, OFFICE DIRECTOR — ORIGINAL ON FILE

REVISIONS
C 01/2009 SHA NO.: XX445/B5 RECONSTRUCT SIGNAL AND ADD APS/ CPS
B 6/2005 TIMS NO.: 0592 REPLACE LOOP DETECTION WITH VIDEO CAMERAS SHA NO.: AT7/75/B5
A 12/86 100% RECONSTRUCT

STATE OF MARYLAND
DEPARTMENT OF TRANSPORTATION
STATE HIGHWAY ADMINISTRATION
OFFICE OF TRAFFIC & SAFETY
TRAFFIC ENGINEERING DESIGN DIVISION

MD 410 (EAST WEST HIGHWAY) @ MEADOWBROOK LANE

TRAFFIC SIGNAL MODIFICATION

TRAFFIC SIGNAL PLAN SHEET

SCALE 1" = 20' ADVERTISED DATE 12 /86 CONTRACT NO. M-411-509-317

DESIGNED BY D DISTANCE
DRAWN BY DCD
CHECKED BY
F.A.P. NO.
COUNTY MONTGOMERY
LOGMILE 15041002.05
TIMS NO. 1588
TOD NO.

TS NO. 2136- C DRAWING - OF SHEET NO. 1 OF 3

PLOTTED: Wednesday, March 18, 2009 AT 04:06 PM
FILE: J:\DATA\1588\PS&E Package from Consultant\pSG-P000_MD410.dgn

BY: mfukui