DRILL HOLES

BORDER REV: DATE: June 1, 2004

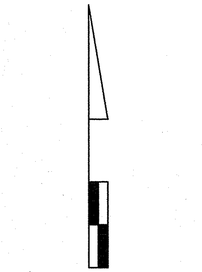

MD 410 IS CONSIDERED TO RUN IN AN EAST-WEST DIRECTION

EXISTING SIGNS

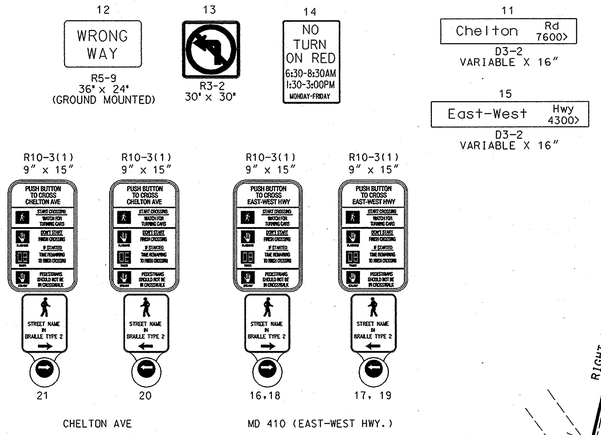

EXISTING SIGNALS

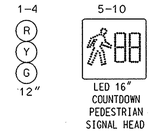

VIDEO DETECTION CAMERA (a)

NEMA PHASING

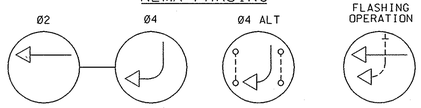

PHASING NOTES:
1.) PHASES ASSOCIATED BY A DASHED LINE WILL OPERATE CONCURRENTLY
2.) PHASES ASSOCIATED BY A SOLID LINE WILL NOT OPERATE CONCURRENTLY

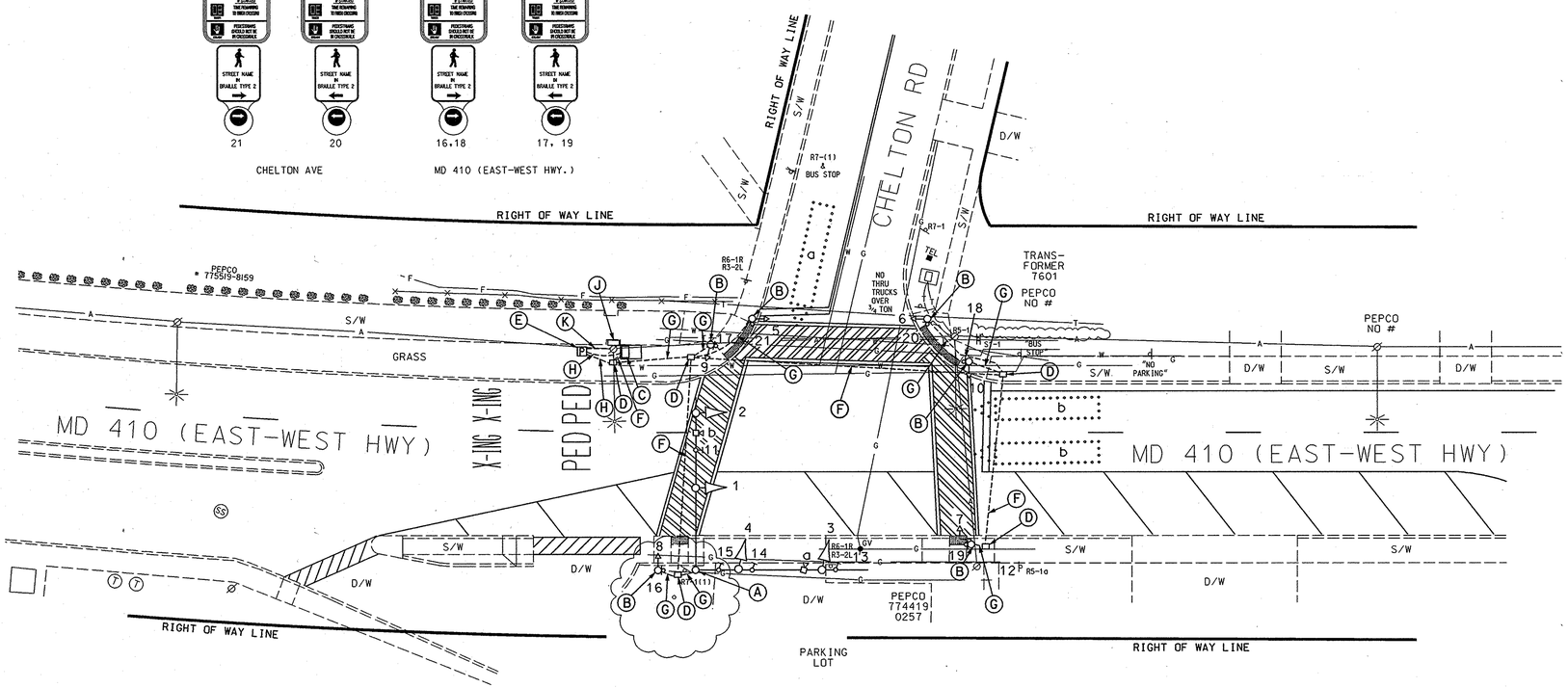

EQUIPMENT DETAILS

A. 15' steel pole with a special 15' "T" dimension with twin 50'/50' mast arms, traffic signal, 15' lighting arm, 250 watt HPS luminaire, signs and video detection camera. (Note: 1-3" 90° polyvinyl chloride (Schedule 80) bend.)

B. 10' breakaway pedestal pole with countdown pedestrian signal head and APS pushbutton with pedestrian education sign. (Note: 1-3" 90° polyvinyl chloride (Schedule 80) bend.)

C. NEMA size "6" base-mounted cabinet and controller with video interface, 2-wire Control unit and all necessary equipment as shown.

D. Handhole.

E. Metered pedestal.

F. 4" polyvinyl chloride electrical conduit (Schedule 80).

G. 3" polyvinyl chloride electrical conduit (Schedule 80).

H. 2" polyvinyl chloride electrical conduit (Schedule 80).

J. Interconnect splice cabinet.

K. Underground service to be maintained by PEPCO.

GENERAL NOTES:

1. This plan reflects only those underground utilities that were apparent at the time of this location being asbuilt. A detailed review was not undertaken and the plan should not be construed as representing all underground utilities in the area.
2. Any modification to this subject signal should be preceded by a thorough identification of all existing utilities.

GEOMETRIC LEGEND
PROPOSED
EXISTING

LEGEND OF UNDERGROUND AND OVERHEAD UTILITIES

AERIAL CABLE	A	A
ELECTRIC	E	E
TELEPHONE	T	T
GAS	G	G
SEWER	S	S
WATER	W	W
CABLE TV	TV	TV

REVISION "D"

STREET TRAFFIC STUDIES, LTD.
400 Crain Hwy. N.W.
Glen Burnie, MD 21061
Ph (410) 590-5500
Fax (410) 590-6637

5639.dgn T-206

APPROVALS
TEAM LEADER
ASST. DIV. CHIEF
DIVISION CHIEF
OFFICE DIRECTOR
ORIGINAL ON FILE

REVISIONS
D ASBUILT 9/4/08
RRZ
C RECONSTRUCT TRAFFIC SIGNAL, ADD APS & CPS 6-18-07
SHA NO.: M02825185
JWA
B PEDESTRIAN SIGNALS FOR CROSSWALK ON WEST LEG OF MD 410 2/2003
SHA. NO. A72885185
MAR DAZ BRK

PLOTTED: $DATETIME$
FILE: $FILE$

SHA
STATE OF MARYLAND
DEPARTMENT OF TRANSPORTATION
STATE HIGHWAY ADMINISTRATION

MD 410 (EAST-WEST HIGHWAY) AND CHELTON ROAD

TRAFFIC SIGNAL PLAN

SCALE 1"= 20' DATE APRIL 18,1971 CONTRACT NO.

DESIGNED BY
DRAWN BY R.CHAMAN
CHECKED BY R.W.
F.A.P. NO.
COUNTY MONTGOMERY
LOGMILE 15041000.35
TIMS NO. H162
TOD NO.

TS NO. 53D | DRAWING NO. 1 OF 1 | SHEET NO. OF

C:\5639.dgn 9/4/2008 11:50:03 AM