F.H.W.A. REGION NO.	STATE	FED. AID PROJ. NO.	SHEET NO.	TOTAL SHEETS
3	MD			

SIGNALS/SIGNS

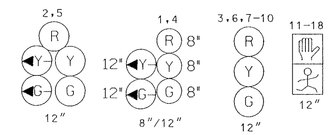

NOTE: SIGNAL HEADS NOS. 2,3 AND 5-10 ARE EXISTING AND WILL REMAIN.

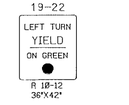

NEMA PHASING

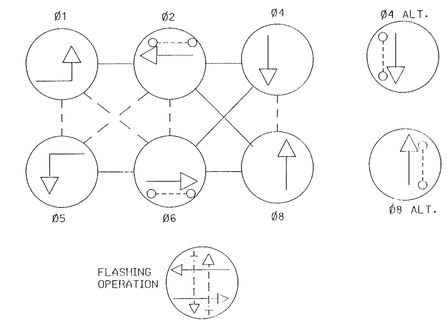

NEMA NOTES
PHASES ASSOCIATED BY A DASHED LINE WILL OPERATE CONCURRENTLY
PHASES ASSOCIATED BY A SOLID LINE WILL NOT OPERATE CONCURRENTLY

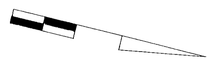

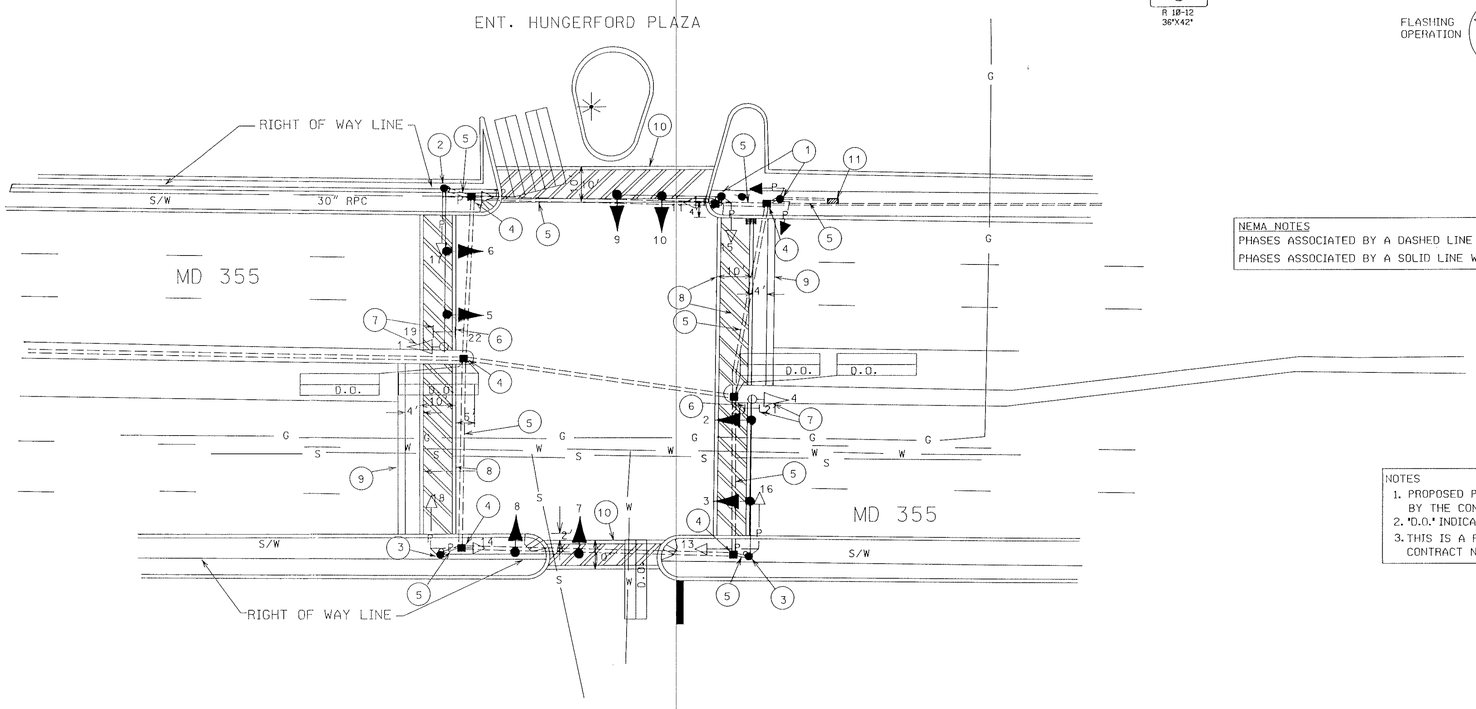

NOTES
1. PROPOSED PAVEMENT MARKINGS SHOWN ARE TO BE INSTALLED BY THE CONTRACTOR IN ACCORDANCE WITH S.H.A. STANDARDS
2. "D.O." INDICATES A DELAY-OUTPUT LOOP DETECTOR
3. THIS IS A REVISION TO THE SIGNAL BUILT IN 1/80 UNDER CONTRACT NO. BW-486-801-312.

UTILITY LEGEND

—— G —— G ——	GAS MAIN
—— W —— W ——	WATER MAIN
—— S —— S ——	SEWER MAIN
—— E —— E ——	ELECTRIC CABLES
—— A —— A ——	AERIAL CABLES
—— T —— T ——	TELEPHONE CABLES

REVISIONS	APPROVALS	REVISIONS
(B) INSTALL NEW PED INDICATIONS AND CROSSWALKS ACROSS EAST & WEST LEGS — MEL — 1/94	ORIGINAL — CHIEF, DESIGN SECTION — NOTED — ASST. DISTRICT ENGINEER, TRAFFIC — ON FILE — CHIEF, TRAFFIC ENGINEERING DESIGN DIVISION — DIRECTOR, TRAFFIC & SAFETY	

MARYLAND DOT - STATE HIGHWAY ADMINISTRATION
Office of Traffic & Safety
TRAFFIC ENGINEERING DESIGN DIVISION
MD 355 & ENTRANCE TO HUNGERFORD PLAZA-EXCHANGE OFFICE BUILDING

DRAWN BY: WES GUCKERT	F.A.P. NO.	PLAN SHEET NO.: TS-873B	SHEET NO. ___ OF ___
CHECK BY: JWS	S.H.A. NO. BW-486-801-312		
SCALE: 1" = 20'	COUNTY MONTGOMERY		

Fig # 38

15035509.50