EXISTING SIGNS

27 — WEST MARYLAND 193 EAST — M95-1 (78"x24")

32 — EAST MARYLAND 193 WEST — M95-1 (78"x24")

28A,31B — University BLVD (2900) — D-3(1) (VAR.x16") DUAL FACE

28B,31A — University BLVD (2900) — D-3(1) (VAR.x16") DUAL FACE

34 — WEST MARYLAND 586 EAST — M95-1 (78"x24")

39 — EAST MARYLAND 586 WEST — M95-1 (78"x24")

35A,38B — Veirs Mill RD (11400) — D-3(1) (VAR.x16") DUAL FACE

35B,38A — Veirs Mill RD (11400) — D-3(1) (VAR.x16") DUAL FACE

MD 586 IS ASSUMED TO RUN IN AN EAST-WEST DIRECTION

26,29,30,33,37 — ONLY — R3-5(L) (30"x36")

36 — metro — I95-4(MOD) (24"x36")

40 — NO TURN ON RED — R10-11b (24"x24")

41 — W11A-2 (36"x36") — M7-4 (12"x9")

42 — W11A-2 (36"x36") — M7-4 (12"x9")

44,46 / 45 / 49 / 48,50 — R10-4(1) (9"x12")

PROPOSED SIGNS

47 — PUSH BUTTON TO CROSS VEIRS MILL RD — R10-3(1) 9" x 15"

43 — PUSH BUTTON TO CROSS UNIVERSITY BLVD — R10-3(1) 9" x 15"

PROPOSED SIGNALS

19,22 — 16" LED COUNTDOWN PEDESTRIAN SIGNAL

EXISTING SIGNALS

1,2,5,6,7,10,11,14,15 — R Y G — 12"

3,4,8,9,12,13,16 — R Y G — 12"

17 — R Y Y G G — 12"

18,20,21,23,24,25 — 16" LED COUNTDOWN PEDESTRIAN SIGNAL

a,b,c,d — EXISTING VIDEO DETECTION

NEMA PHASING

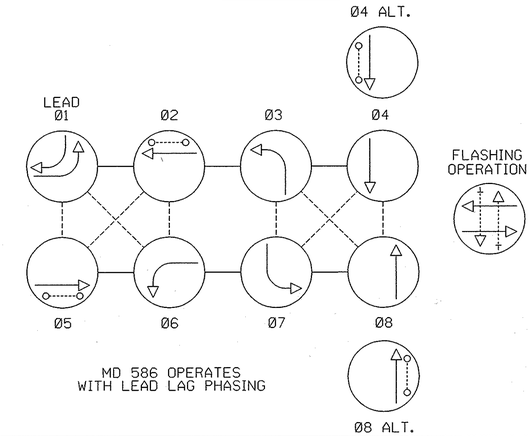

MD 586 OPERATES WITH LEAD LAG PHASING

NOTE:
PHASES ASSOCIATED BY A DASHED LINE WILL OPERATE CONCURRENTLY.
PHASES ASSOCIATED BY A SOLID LINE WILL NOT OPERATE CONCURRENTLY.

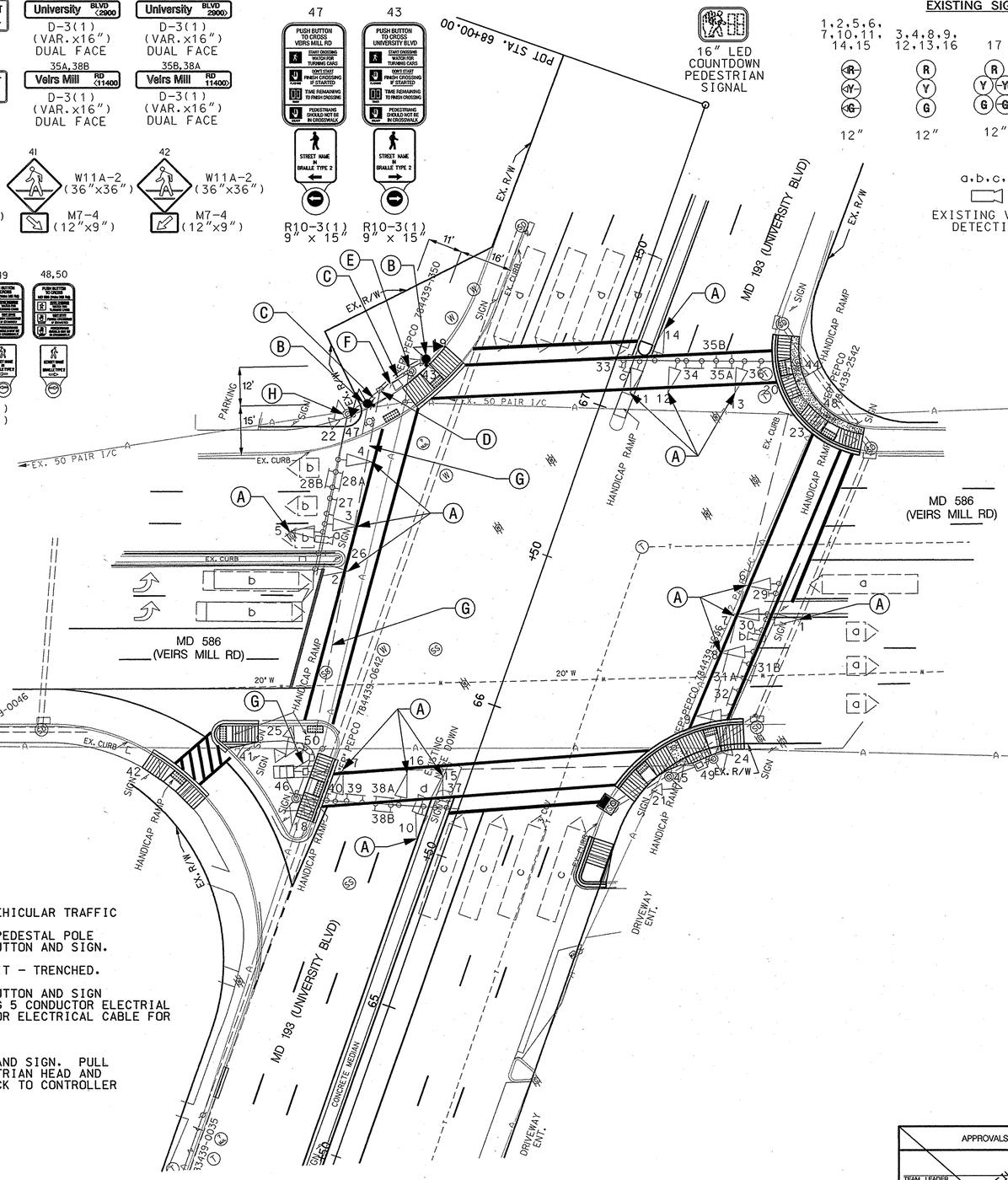

CONSTRUCTION DETAILS

A. REMOVE EXISTING BULB AND INSTALL 12 INCH LED VEHICULAR TRAFFIC SIGNAL MODULE.
B. INSTALL CONCRETE FOUNDATION WITH 10 FT. STEEL PEDESTAL POLE WITH BREAKAWAY BASE, PEDESTRIAN SIGNALS, PUSHBUTTON AND SIGN. (NOTE: ONE 3 IN. PVC SCHEDULE 80 CONDUIT BEND).
C. INSTALL 3 IN. PVC SCHEDULE 80 ELECTRICAL CONDUIT - TRENCHED.
D. USE EXISTING HANDHOLE.
E. REMOVE EXISTING PEDESTRIAN POLE, SIGNAL, PUSHBUTTON AND SIGN AND BACKFILL 12 IN. BELOW GRADE. PULL EXISTING 5 CONDUCTOR ELECTRIAL CABLE FOR PEDESTRIAN SIGNAL HEAD AND 2 CONDUCTOR ELECTRICAL CABLE FOR PUSHBUTTON BACK TO CONTROLLER AND REMOVE.
F. CAP AND ABANDON EXISTING CONDUIT.
G. USE EXISTING CONDUIT.
H. REMOVE EXISTING PEDESTRIAN SIGNAL, PUSHBUTTON AND SIGN. PULL EXISTING 5 CONDUCTOR ELECTRIAL CABLE FOR PEDESTRIAN HEAD AND 2 CONDUCTOR ELECTRICAL CABLE FOR PUSHBUTTON BACK TO CONTROLLER AND REMOVE.

GENERAL NOTES

1. THE CONTRACTOR SHALL VERIFY ALL PROPOSED POLE LOCATIONS PRIOR TO INSTALLATION.
2. FOR FINAL PAVEMENT MARKINGS REFER TO THE PAVEMENT MARKING PLANS. ALL PAVEMENT MARKINGS SHALL BE INSTALLED IN ACCORDANCE WITH MSHA STANDARDS.
3. ALL EXISTING TRAFFIC SIGNAL EQUIPMENT REMOVED SHALL BECOME THE PROPERTY OF THE SIGNAL CONTRACTOR UPON COMPLETION OF THE NEW SIGNAL.
4. THE CONTRACTOR SHALL BE RESPONSIBLE FOR TERMINATING ALL SIGNAL CABLE TO THE APPROPRIATE TERMINALS AND PROPERLY LABEL EACH CABLE.
5. THE CONTRACTOR SHALL VERIFY ALL UNDERGROUND UTILITIES PRIOR TO INSTALLING PROPOSED SIGNAL EQUIPMENT. IF ANY UTILITIY CONFLICTS SHOULD ARISE THE CONTRACTOR SHALL CONTACT THE PROJECT ENGINEER.
6. ALL TRAFFIC SIGNAL FOUNDATIONS SHALL BE INSTALLED AT THE FINAL SIDEWALK OR CURB GRADE FOR CLOSED SECTIONS, HIGHEST ROADWAY PROFILE GRADE FOR OPEN SECTIONS, TO MEET CLEARANCES AS SPECIFIED IN MD 816.03, MD 818.01, MD 818.02, MD 818.04. THE CONTRACTOR SHALL VERIFY ULTIMATE GRADES PRIOR TO THE INSTALLATION OF ALL SIGNAL EQUIPMENT.
7. REFER TO ROADWAY PLANS FOR INSTALLATION OF AND MODIFICATIONS TO ALL ADA RAMPS.
8. PUSHBUTTONS ARE TO BE LOCATED SO THAT THEY CAN BE ACTIVATED BY A PERSON IN A WHEELCHAIR REACHING LESS THAN 18" FROM A 60" X 60" LEVEL LANDING AREA WITH A CROSS SLOPE OF LESS THAN OR EQUAL TO 2%.
9. THE 10' SEPARATION BETWEEN PUSHBUTTONS IS TO BE MEASURED FROM FACE OF PUSHBUTTON TO FACE OF PUSHBUTTON, NOT CENTER TO CENTER OF POLE.
10. PUSHBUTTON ARROWS ARE TO BE PARALLEL TO THE CROSSING FOR WHICH THEY ARE INTENDED.
11. LOCATION OF ACCESSIBLE PEDESTRIAN SIGNAL PUSHBUTTONS MUST MEET LOCATION REQUIREMENTS OF MUTCD SEC. 4E.09 AND FIG. 4E.2 AND THE NCHRP PUBLICATION, "ACCESSIBLE PEDESTRIAN SIGNALS: GUIDE TO BEST PRACTICE". IF NOT MET, THE CONTRACTOR IS TO STOP WORK ON PUSHBUTTON LOCATIONS UNTIL A DESIGN WAIVER IS OBTAINED, APPROVED BY THE DIRECTOR, OFFICE OF TRAFFIC AND SAFETY.

STATE OF MARYLAND
DEPARTMENT OF TRANSPORTATION
STATE HIGHWAY ADMINISTRATION
OFFICE OF TRAFFIC & SAFETY
TRAFFIC ENGINEERING DESIGN DIVISION

MD 193 (UNIVERSITY BLVD) - FARRAGUT AVE TO MD 586
MD 193 (UNIVERSITY BLVD) @ MD 586 (VEIRS MILL RD)

SIGNALIZATION PLAN SHEET

SCALE 1"=20' ADVERTISED DATE 9/2/1971 CONTRACT NO. MO5785177

DESIGNED BY
DRAWN BY
CHECKED BY
F.A.P. NO. SEE TITLE SHEET
COUNTY MONTGOMERY
LOGMILE 1501930124
TIMS NO. 1786
TOD NO.

TS NO. 222C | DRAWING SG-7 OF 8 | SHEET NO. 44 OF 45

APPROVALS: TEAM LEADER, ASST. DIV. CHIEF, DIVISION CHIEF, OFFICE DIRECTOR — ORIGINAL ON FILE

REVISIONS
B 05/02/2008 Install LED Traffic Signal Modules and New Pedestrian Signals in NE Quadrant. 1786 — DSU
C 2/2005 Reconstruct Traffic Signal Install Audible Peds. — SWA
B 6/14/04 Modify Geometrics Extend Median North Leg MD 586 SHA NO. BR95GMRZ — FIH DAE MAR DAZ

PLOTTED: Friday, May 02, 2008 AT 12:50 PM
FILE: p:\2004\04006575\Drawings\MD 193_MD 586\pSG-P001_MD193-2.dgn

WHITNEY BAILEY COX & MAGNANI, LLC
849 Fairmount Ave. Suite 100 Baltimore, MD 21286
Tel. 410-512-4500 Fax. 410-324-4100
www.wbcm.com
WBCM ARCHITECTURE ENGINEERING CONSTRUCTION

BY: jholloway

UTILITY LEGEND

E	ELECTRIC CABLES	SD	STORM DRAIN
A	AERIAL CABLES	G	GAS MAIN
T	TELEPHONE CABLES	W	WATER MAIN
F	FIBER-OPTIC	S	SEWER MAIN