DRILL HOLES

BORDER REV. DATE: June 1, 2004

PROJECT DESCRIPTION

I. GENERAL

This project involves the modifcation of an existing Traffic Control Signal with interconnect at the intersection of MD 187 (Old Georgetown Rd) and McKinley Street in Montgomery County. The existing pedestrian signal heads shall be replaced with Countdown pedestrian signals. MD 187 (Old Georgetown Rd) is assumed to run a north-south direction.

II. INTERSECTION OPERATION

1. The intersection is to operate in a NEMA six-phase, semi-actuated mode, with the MD 187 (Old Georgetown Rd) approaches running concurrently. The Exclusive/Permissive left turn phase for the northbound and southbound approaches of MD 187 (Old Georgetown Rd) will continue to operate as normal. A Countdown pedestrian phase with audible pushbutton actuation shall be provided across the south leg of MD 187 (Old Georgetown Rd). The Countdown pedestrian phase with audible pushbuttons across McKinley Street shall be on recall. The McKinley Street approaches shall continue to operate concurrently.

2. An existing eight-phase controller, shall be used to house the proposed 2-wire Control Unit and all necessary equipment housed in a NEMA size "6" base-mounted cabinet shall be utilized at this intersection.

3. Montgomery County signal shop shall install APS control unit into controller cabinet. The Contractor shall deliver the Control Unit and audible pushbuttons to the Montgomery County Signal Shop for testing and programming.

III. SPECIAL NOTES

1. The Contractor shall be responsible for terminating all signal cables, excluding interconnect, to the appropriate terminals and shall properly label each cable.

2. All controller cabinet wiring will be performed by the Montgomery County Signal Shop. Contact Mr. Kamal Hamud at (240) 777-8761 seventy-two hours in advance of intended work.

3. All underground and overhead utilities shown on these plans are schematic only and may not be complete. The Contractor shall be responsible for notifying Miss Utility prior to construction so that all utilities may be located in the field. If the Contractor perceives that a conflict between the utilities and the traffic signal will occur, the Contractor shall notify the Project Engineer immediately so that the conflict may be resolved.

4. APS will function as follows:

FOR MD 187 (OLD GEORGETOWN RD)

a When pedestrian locates and presses pushbutton for an extended time, the pushbutton unit will be " Wait to cross Old Georgetown at McKinley"

b. When WALK phase begins, the message will be a rapid tick which will last for the duration of the WALK phase.

FOR McKINLEY STREET

a When pedestrian locates and presses pushbutton for an extended time, the pushbutton unit will be " Wait to cross McKinley at Old Georgetown"

b. When WALK phase begins, the message will be a rapid tick which will last for the duration of the WALK phase.

The contact persons for District #3 (Montgomery County) are as follows:

Mr. Jeff Wentz
Assistant District Engineer - Traffic
Phone: (301) 513-7358

Mr. Wayne Mowdy
Assistant District Engineer - Maintenance
Phone: (301) 513-7304

Mr. Augie Rebish
District Engineer - Utility
Phone: (301) 513-7350

Mr. Richard L. Daff, Sr.
Chief, Traffic Operations Division
Phone: (410) 787-7630

Mr. Keith Lord
Chief, Montgomery County Signal Shop
301-279-1291

Mr. Sonny Bailey
Chief, Sign Shop
410-787-7676

The power company representative is:

Mr. Steve Custer
PEPCO Customer Design
201 W Gude Dr.
Rockville, MD 20850
Phone: 301 548-4333

EQUIPMENT LIST

A. EQUIPMENT TO BE FURNISHED AND INSTALLED BY THE CONTRACTOR

CAT NO.	DESCRIPTION	QUANTITY
973023	SHEET ALUMINIUM SIGNS	93 SF
	D3-2 "Old Georgetown Rd 8500>/ Old Georgetown Rd <8500" sign, (dual faced) (variable x 16").	2 EA
	Pedestrian education R10-3(1) mod sign. (Note: Sign to read "PUSHBUTTON TO CROSS OLD GEORETOWN ROAD").	2 EA
	Pedestrian education R10-3(1) mod sign. (Note: Sign to read "PUSHBUTTON TO CROSS McKinley Street").	4 EA

EQUIPMENT LIST (CONT.)

A. EQUIPMENT TO BE SUPPLIED BY S.H.A..

CAT NO.	DESCRIPTION	QUANTITY
	GUIDE SHIELD ASSEMBLY (48"x75") pole mounted. M3-3 "SOUTH"(30"X15") M1-5 "MD 187"(48"X36") M6-1 "left arrow "(30"X24")	1 EA
	GUIDE SHIELD ASSEMBLY (30"x51") pole mounted. M3-1 "NORTH"(24"X12") M1-5 "MD 187"(30"X24") M6-1 "right arrow "(21"X15")	1 EA
	GUIDE SHIELD ASSEMBLY (48"x75") pole mounted. M3-1 "NORTH"(30"X15") M1-5 "MD 187"(48"X36") M6-1 "left arrow "(30"X24")	1 EA
	GUIDE SHIELD ASSEMBLY (30"x51") pole mounted. M3-3 "SOUTH"(24"X12") M1-5 "MD 187"(30"X24") M6-1 "right arrow "(21"X15")	1 EA

B. EQUIPMENT TO BE FURNISHED AND INSTALLED BY THE CONTRACTOR

CAT NO.	DESCRIPTION	QUANTITY
203030	TEST PIT EXCAVATION	3 CY
585621	12 INCH WHITE PREFORMED THERMOPLASTIC PAVEMENT MARKING LINES	400 SF
585625	24 INCH WHITE PREFORMED THERMOPLASTIC PAVEMENT MARKING LINES	200 SF
800000A	16" COUNTDOWN PEDESTRIAN SIGNAL HEAD	6 EA
800000A	2 WIRE CONTROL UNIT	1 EA
800000A	AUDIBLE TACTILE PEDESTRIAN PUSHBUTTON STATION AND SIGNS	6 EA
801004	CONCRETE FOR SIGNAL FOUNDATION	4 CY
802501	NO. 6 AWG STRANDED BARE COPPER GROUND WIRE	275 LF
805135	3 INCH SCHEDULE 80 RIGID PVC CONDUIT-TRENCHED	120 LF
805155	4 INCH SCHEDULE 80 RIGID PVC CONDUIT-SLOTTED	270 LF
813014	INSTALL GROUND MOUNTED SIGN	6 SF
813015	INSTALL OVERHEAD SIGN	87 SF
818004	10 FOOT BREAKAWAY PEDESTAL POLE	4 EA
805160	1 INCH DIAMETER FLEXIBLE NON-METALIC CONDUIT	100 LF
837001	GROUND ROD - 3/4 INCH DIAMETER X 10 FOOT LENGTH	4 EA
861105	ELECTRICAL CABLE - 2 CONDUCTOR (NO. 14 AWG)	725 LF
861107	ELECTRICAL CABLE - 5 CONDUCTOR (NO. 14 AWG)	725 LF
862101	LOOP WIRE ENCASED IN FLEXIBLE TUBING (NO. 14 AWG)	2125 LF
800000	REMOVE AND DISPOSE EXISTING EQUIPMENT	1 EA

C. EQUIPMENT TO BE REMOVED

All removed signal materials are to become property of the contractor.

PHASE CHART

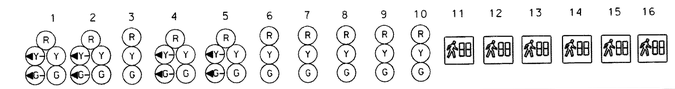

	1	2	3	4	5	6	7	8	9	10	11	12	13	14	15	16
PHASE 1 & 5	◄G-/R	◄G-/R	R	◄G-/R	◄G-/R	R	R	R	R	R	DW	DW	DW	DW	DW	DW
CHANGES TO PHASES	1 & 6,	2 & 5	OR 2 & 6													
PHASE 1 & 6	◄G-/G	◄G-/G	G	R	R	R	R	R	R	R	DW	WK	WK	DW	DW	DW
1 CHANGE	◄Y-/G	◄Y-/G	G	R	R	R	R	R	R	R	DW	WK	WK	DW	DW	DW
PHASE 2 & 5	R	R	R	◄G-/G	◄G-/G	G	R	R	R	R	WK	DW	DW	WK	DW	DW
5 CHANGE	R	R	R	◄Y-/G	◄Y-/G	G	R	R	R	R	WK	DW	DW	WK	DW	DW
PHASE 2 & 6	G	G	G	G	G	G	R	R	R	R	WK	WK	WK	WK	DW	DW
PED CLEAR / COUNTDOWN	G	G	G	G	G	G	R	R	R	R	FL/DW	FL/DW	FL/DW	FL/DW	DW	DW
2 & 6 CHANGE	Y	Y	Y	Y	Y	Y	R	R	R	R	DW	DW	DW	DW	DW	DW
PHASE 4 & 8	R	R	R	R	R	R	G	G	G	G	DW	DW	DW	DW	DW	DW
4 & 8 CHANGE	R	R	R	R	R	R	Y	Y	Y	Y	DW	DW	DW	DW	DW	DW
PHASE 4 ALT	R	R	R	R	R	R	G	G	R	R	DW	DW	DW	DW	WK	WK
PED CLEAR / COUNTDOWN	R	R	R	R	R	R	G	G	R	R	DW	DW	DW	DW	FL/DW	FL/DW
4 ALT CHANGE	R	R	R	R	R	R	Y	Y	R	R	DW	DW	DW	DW	DW	DW
FLASHING OPERATION	FL/Y	FL/Y	FL/Y	FL/Y	FL/Y	FL/Y	FL/R	FL/R	FL/R	FL/R	DARK	DARK	DARK	DARK	DARK	DARK

WIRING DIAGRAM

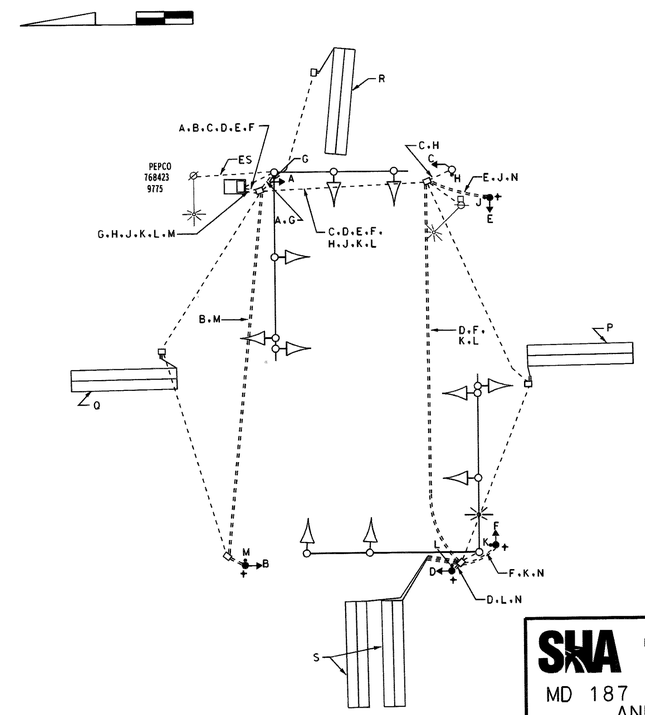

WIRING KEY

A B C D E F } 5-CONDUCTOR ELECTRICAL CABLE (NO. 14 A.W.G)

G H J K L M } 2-CONDUCTOR ELECTRICAL CABLE (NO. 14 A.W.G)

N - STRANDED BARE COPPER GROUND WIRE (NO. 6 A.W.G.)

O OR P } SPLICE TO EXISTING 2-CONDUCTOR ALUMINUM SHIELDED CABLE

ES - EXISTING POWER SERVICE

+ - GROUND ROD

STATE OF MARYLAND
DEPARTMENT OF TRANSPORTATION
STATE HIGHWAY ADMINISTRATION

MD 187 (OLD GEORGETOWN ROAD) AND McKINLEY STREET

BETHESDA, MARYLAND

GENERAL INFORMATION SHEET

SCALE NONE DATE 12/22/08 CONTRACT NO. MO429518~~6~~

DESIGNED BY James Allen Jr.
DRAWN BY James Allen Jr.
CHECKED BY
F.A.P. NO.

COUNTY MONTGOMERY
LOGMILE 15018700~~1~~.18
TIMS NO. J511
TOD NO.

TS NO. 43~~16~~D | DRAWING NO. 2 OF 2 | SHEET NO. OF

TS 3186

STREET TRAFFIC STUDIES, LTD.
400 Crain Hwy. NW.
Glen Burnie, MD 21061
Ph (410) 590-5500
Fax (410) 590-6637

5649GI.dgn T-211

PLOTTED: $DATETIME$
FILE: $FILE$