DRILL HOLES

BORDER REV: DATE: June 1, 2004

PROJECT DESCRIPTION

I. GENERAL

This project involves the modification of an existing Traffic Control Signal with street lighting and interconnect at the intersection of MD 119 (Great Seneca Hwy) and Lakelands Drive in Montgomery County. Countdown pedestrian signals with audible pushbuttons and a right turn phase for the Lakelands Drive approach shall be installed at this location. MD 119 (Great Seneca Hwy) is assumed to run an east-west direction.

II. INTERSECTION OPERATION

1. The intersection shall continue to operate in a NEMA four-phase, semi-actuated mode, with the MD 119 (Great Seneca Hwy) approaches running concurrently. The Exclusive/Permissive left turn phases for the northbound approach of MD 119 (Great Seneca Hwy) shall remain in operation. A new Countdown pedestrian phase with audible pushbutton actuation shall be provided across the north leg of MD 119 (Great Seneca Hwy). The farside sampling stations on both legs of MD 119 (Great Seneca Hwy) shall remain in operation. The Lakelands Drive approach shall also continue to run concurrently.

2. The existing full-traffic-actuated, eight-phase controller with all necessary equipment housed in a NEMA size "6" base-mounted cabinet shall be utilized at this intersection.

   Montgomery County signal shop shall install APS control unit into controller cabinet. The Contractor shall deliver the Control Unit and audible pushbuttons to the Montgomery County Signal Shop for testing and programming. Contact Mr. Keith Lord (301) 675-8965

III. SPECIAL NOTES

1. The Contractor shall be responsible for terminating all signal cables, to the appropriate terminals and shall properly label each cable.

2. All controller cabinet wiring will be performed by Montgomery County Forces. Contact Kamal Hamud at (240) 777-8761 seventy-two hours in advance of intended work.

3. All underground and overhead utilities shown on these plans are schematic only and may not be complete. The Contractor shall be responsible for notifying Miss Utility prior to construction so that all utilities may be located in the field. If the Contractor perceives that a conflict between the utilities and the traffic signal will occur, the Contractor shall notify the Project Engineer immediately so that the conflict may be resolved.

The contact persons for District #3 (Montgomery County) are as follows:

Mr. Jeff Wentz
Assistant District Engineer - Traffic
Phone: (301) 513-7318

Mr. Wayne Mowdy
Assistant District Engineer - Maintenance
Phone: (301) 513-7304

Mr. Augie Rebish
District Engineer - Utility
Phone: (301) 513-7350

Mr. Richard L. Daff, Sr.
Chief, Traffic Operations Division
Phone: (410) 787-7630

Mr. Keith Lord
Signal Shop (Mont Co.)
301-674-8965 (cell)

Mr. Sonny Bailey
Sign Shop
410-787-7670

EQUIPMENT LIST

A. EQUIPMENT TO BE SUPPLIED BY S.H.A..

ITEM NO.	DESCRIPTION	QUANTITY
9570	Sheet aluminum signs to consist of: (ground mount)	12.5 SF
	R3-7R "RIGHT LANE MUST TURN RIGHT" sign, (30" x 30") ground mounted with hardware.	2 EA
9571	Sheet aluminum signs to consist of: (mast arm or pole mount)	37 SF
	GUIDE SHIELD ASSEMBLY (48"x75") pole mounted. M3-1 "NORTH"(30"X15") M1-5 "MD 119"(48"X36") M6-1 "left arrow "(30"X24")	1 EA
	GUIDE SHIELD ASSEMBLY (30"x51") pole mounted. M3-3 "SOUTH"(24"X12") M1-5 "MD 119"(30"X24") M6-1 "right arrow "(21"X15")	1 EA
	Pedestrian education R10-4(1) mod sign. (Note: Sign to read "PUSHBUTTON TO CROSS GREAT SENECA HWY".)	2 EA

EQUIPMENT LIST (CONT.)

B. EQUIPMENT TO BE FURNISHED AND INSTALLED BY THE CONTRACTOR

ITEM NO.	DESCRIPTION	QUANTITY
1001	Maintenance of traffic per assignment.	1 EA
2002	Test Pit Excavation	2 C.Y.
5001	5" heat applied white permanent preformed thermoplastic pavement marking.	575 L.F.
5006	Heat applied white permanent preformed thermoplastic pavement marking letter.	4 EA
5007	Heat applied white permanent preformed thermoplastic pavement marking arrow.	2 EA
6002	4" concrete sidewalk.	35 S.F.
8001	12" LED signal head section.	11 EA
8002	2 wire Central Control unit	1 EA
8008	Audible/tactile pedestrian pushbutton station & signs.	2 EA
8009	Breakaway Pedestal pole (10').	2 EA
8014	LED 16" countdown pedestrian signal head.	2 EA
8022	Remove and dispose of existing material and equipment per assignment.	1 EA
8035	Schedule 80 rigid PVC conduit up tp 4" - trenched.	20 L.F.
8036	Schedule 80 rigid PVC conduit up tp 4" - bored.	35 L.F.
8037	Wood sign supports up to 4"x6".	32 L.F.
8038	Detectable warning surfaces	32 S.F.
8039	Install overhead or ground mounted sign (including hardware).	49.5 S.F.
8041	No. 6 AWG stranded bare copper ground wire.	60 L.F.
8054	Electrical cable - 2 conductor (No. 14 AWG).	310 L.F.
8056	Electrical cable - 5 conductor (No. 14 AWG).	320 L.F.
8057	Electrical cable - 7 conductor (No. 14 AWG).	355 L.F.

C. EQUIPMENT TO BE REMOVED

All other removed signal materials are to become property of the contractor.

PHASING DIAGRAM

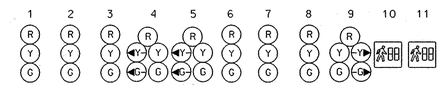

	1	2	3	4	5	6	7	8	9	10	11
PHASE 1 & 6	R	R	R	◄G-/G	◄G-/G	G	R	R	R/-G►	DW	DW
1 & 6 CHANGE	R	R	R	◄Y-/G	◄Y-/G	G	R	R	R/-Y►	DW	DW
PHASE 2 & 6	G	G	G	G	G	G	R	R	R	DW	DW
2 & 6 CHANGE	Y	Y	Y	Y	Y	Y	R	R	R	DW	DW
PHASE 4	R	R	R	R	R	R	G	G	G	DW	DW
4 CHANGE	R	R	R	R	R	R	Y	Y	Y	DW	DW
PHASE 4 ALT	R	R	R	R	R	R	G	G	G	WK	WK
PED CLEARANCE / COUNTDOWN	R	R	R	R	R	R	G	G	G	FL/DW	FL/DW
4 ALT CHANGE	R	R	R	R	R	R	Y	Y	Y	DW	DW
FLASHING OPERATION	FL/Y	FL/Y	FL/Y	FL/Y	FL/Y	FL/Y	FL/R	FL/R	FL/R	DARK	DARK

WIRING DIAGRAM

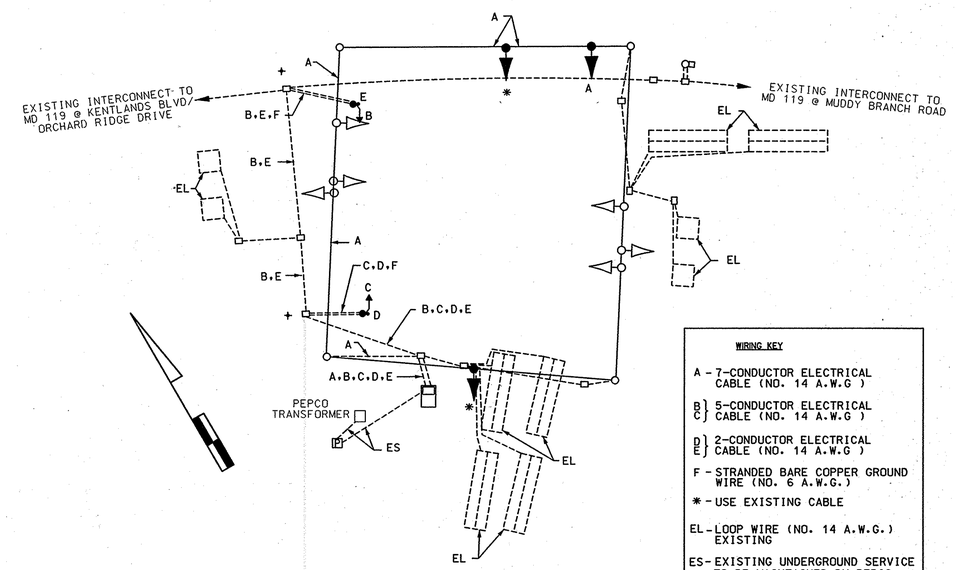

TOD No.: AT915-11
SHA No.: MO591A51/B51
MD 119 @ Lakelands Drive

REVISION "A"

STREET TRAFFIC STUDIES, LTD.
400 Crain Hwy.,NW.
Glen Burnie,MD 21061
Ph (410) 590-5500
Fax (410) 590-6637

5124GI.dgn T-18

STATE OF MARYLAND
DEPARTMENT OF TRANSPORTATION
STATE HIGHWAY ADMINISTRATION

MD 119 (GREAT SENECA HWY) @ LAKELANDS DRIVE

GENERAL INFORMATION SHEET

SCALE NONE DATE 9/26/06 CONTRACT NO. AT9155185

DESIGNED BY J. ALLEN COUNTY MONTGOMERY
DRAWN BY R. C. LOGMILE 15011901.67
CHECKED BY TIMS NO. H828
F.A.P. NO. TOD NO.

TS NO. 4520 | DRAWING NO. 2 OF 2 | SHEET NO. OF

PLOTTED: $DATETIME$
FILE: $FILE$

\5060's\5124\5124gi.dgn Sep. 26, 2006 10:26:20