DRILL HOLES

BORDER REV: DATE: June 1, 2004

DRILL HOLES

DRILL HOLES

MD 108 IS CONSIDERED TO RUN IN A NORTH-SOUTH DIRECTION

INSET 'A"

SIGNAL, SIGN, VIDEO DETECTOR NUMBERING

EXISTING SIGNS

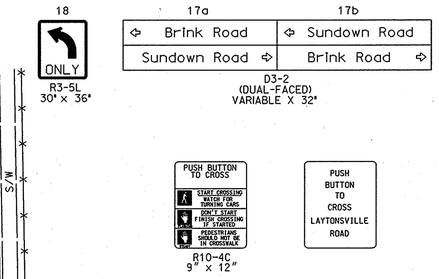

EXISTING SIGNALS

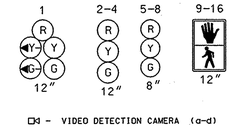

NEMA PHASING

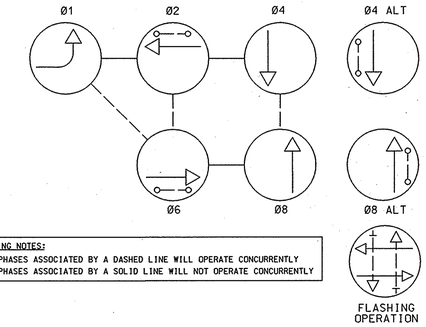

PHASING NOTES:
1.) PHASES ASSOCIATED BY A DASHED LINE WILL OPERATE CONCURRENTLY
2.) PHASES ASSOCIATED BY A SOLID LINE WILL NOT OPERATE CONCURRENTLY

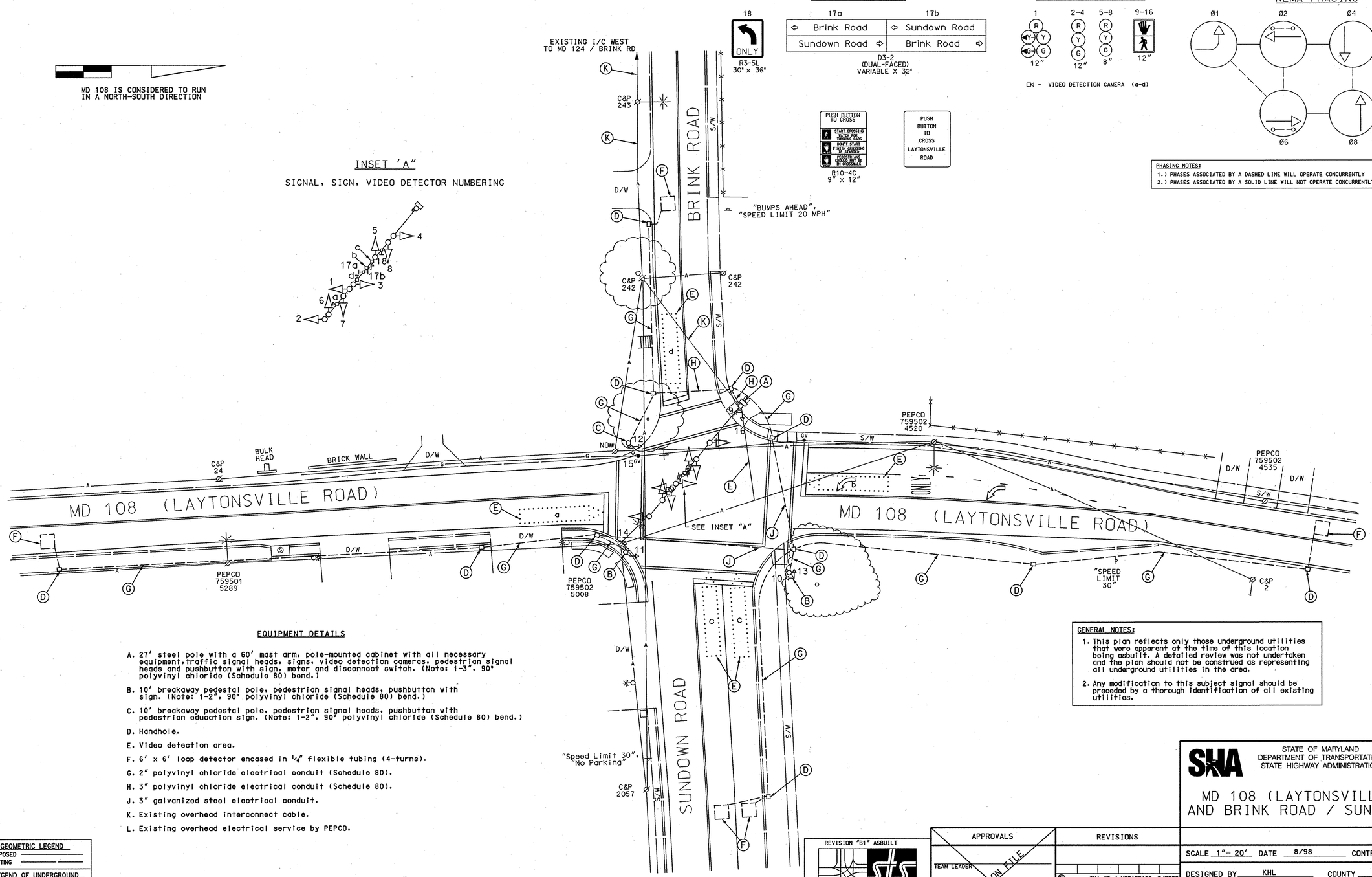

EQUIPMENT DETAILS

A. 27' steel pole with a 60' mast arm, pole-mounted cabinet with all necessary equipment, traffic signal heads, signs, video detection cameras, pedestrian signal heads and pushbutton with sign, meter and disconnect switch. (Note: 1-3", 90° polyvinyl chloride (Schedule 80) bend.)

B. 10' breakaway pedestal pole, pedestrian signal heads, pushbutton with sign. (Note: 1-2", 90° polyvinyl chloride (Schedule 80) bend.)

C. 10' breakaway pedestal pole, pedestrian signal heads, pushbutton with pedestrian education sign. (Note: 1-2", 90° polyvinyl chloride (Schedule 80) bend.)

D. Handhole.

E. Video detection area.

F. 6' x 6' loop detector encased in 1/4" flexible tubing (4-turns).

G. 2" polyvinyl chloride electrical conduit (Schedule 80).

H. 3" polyvinyl chloride electrical conduit (Schedule 80).

J. 3" galvanized steel electrical conduit.

K. Existing overhead interconnect cable.

L. Existing overhead electrical service by PEPCO.

GENERAL NOTES:

1. This plan reflects only those underground utilities that were apparent at the time of this location being asbuilt. A detailed review was not undertaken and the plan should not be construed as representing all underground utilities in the area.

2. Any modification to this subject signal should be preceded by a thorough identification of all existing utilities.

GEOMETRIC LEGEND

PROPOSED
EXISTING

LEGEND OF UNDERGROUND AND OVERHEAD UTILITIES

AERIAL CABLE	A	A
ELECTRIC	E	E
TELEPHONE	T	T
GAS	G	G
SEWER	S	S
WATER	W	W
CABLE TV	TV	TV

REVISION "B1" ASBUILT

STREET TRAFFIC STUDIES, LTD.
400 Crain Hwy. NW.
Glen Burnie, MD 21061
Ph (410) 590-5500
Fax (410) 590-6637

4900b.dgn D6-46

APPROVALS

TEAM LEADER
ASST. DIV. CHIEF
DIVISION CHIEF
OFFICE DIRECTOR

ORIGINAL ON FILE

REVISIONS

B1 SHA NO # MD7175185 3/2006
ASBUILT FOR REPLACEMENT OF LOOP DETECTION WITH VIDEO CAMERAS
JWA

A REVISE PEDS AND DETECTION 9/89
DUE TO WIDENING ALONG NB MD 108 AND WB SUNDOWN RD
RRZ

PLOTTED: MONDAY, MARCH 27, 2006 AT 5:32:50 PM
FILE: 4900B.DGN

SHA
STATE OF MARYLAND
DEPARTMENT OF TRANSPORTATION
STATE HIGHWAY ADMINISTRATION

MD 108 (LAYTONSVILLE ROAD) AND BRINK ROAD / SUNDOWN ROAD

SCALE 1"= 20' DATE 8/98 CONTRACT NO.

DESIGNED BY KHL COUNTY MONTGOMERY
DRAWN BY JCB LOGMILE 15010807.40
CHECKED BY TIMS NO. G582
F.A.P. NO. TOD NO.

TS NO. 2481B DRAWING NO. 1 OF 1 SHEET NO. OF