PROJECT DESCRIPTION

GENERAL

THIS PROJECT INVOLVES THE MODIFICATION TO THE LEFT TURN PHASING FROM E/P TO EXCLUSIVE IN BOTH DIRCETIONS E/B & W/B ALONG MD 108 (SANDY SPRING ROAD) AT OLD BALTIMORE ROAD IN MONTGOMERY COUNTY.

INTERSECTION OPERATION

(SEE ABOVE)

SPECIAL NOTES

1. THE FOLLOWING CONTACT PERSONS FOR DISTRICT #3 ARE AS FOLLOWS:

PROJECT CONTACTS:

MR. LEE STARKLOFF, ASSISTANT DISTRICT ENGINEER - TRAFFIC
PHONE: (301) 513-7358
MR. RALEIGH MEDLEY, ASSISTANT DISTRICT ENGINEER- MAINTENANCE
PHONE: (301) 513-7300
MR. AUGIE REBISH, ASSISTANT DISTRICT ENGINEER - UTILITY
PHONE: (301) 513-7300
MR. RICHARD L. DAFF, SR. CHIEF TRAFFIC OPERATIONS DIVISION
PHONE: (410) 787-7630
MR. ROBERT SNYDER, ASSISTANT CHIEF TRAFFIC OPERATIONS DIVISION
PHONE:(410)787-7631
MR. ED RODENHIZER, CHIEF OF SIGNAL SHOP
PHONE:(410)787-7650

2. MAINTENANCE OF TRAFFIC WILL BE HANDLED BY THE CONTRACTOR FOLLOWING STANDARD PLATES FOR TRAFFIC CONTROL:

EQUIPMENT LIST

A. EQUIPMENT TO BE SUPPLIED BY THE ADMINISTRATION.

ITEM NO.	DESCRIPTION			UNITS	QUANTITY
9004	FLAT SHEET ALUMINUM SIGNS CONSISTING OF: R3-5(L) SPAN WIRE MOUNTED	EA	2	SF	15

B. EQUIPMENT TO BE FURNISHED AND/OR INSTALLED BY THE CONTRACTOR.

ITEM NO.	DESCRIPTION	UNITS	QUANTITY
1001	MAINTENANCE OF TRAFFIC	EA	1
8013	REMOVE AND DISPOSE MAT. AND EQUIPMENT PER EACH PER ASSIGNMENT	EA	1
8043	INSTALL OVERHEAD SIGNS	SF	15
8053	FURNISH AND INSTALL 12 IN VEHICLE SIGNAL HEAD SECTION	EA	24
8058	FURNISH AND INSTALL ELECTRICAL CABLE 5-CONDUCTOR NO. 14 AWG	LF	400

C. MATERIALS TO BE REMOVED BY THE CONTRACTOR.
ALL MATERIALS TO BE REMOVED AND DISPOSED OF BY THE CONTRACTOR SHALL BECOME PROPERTY OF THE CONTRACTOR.

DESCRIPTION	UNITS	QUANTITY
SIGNAL HEADS AND SIGNS		

WIRING DIAGRAM

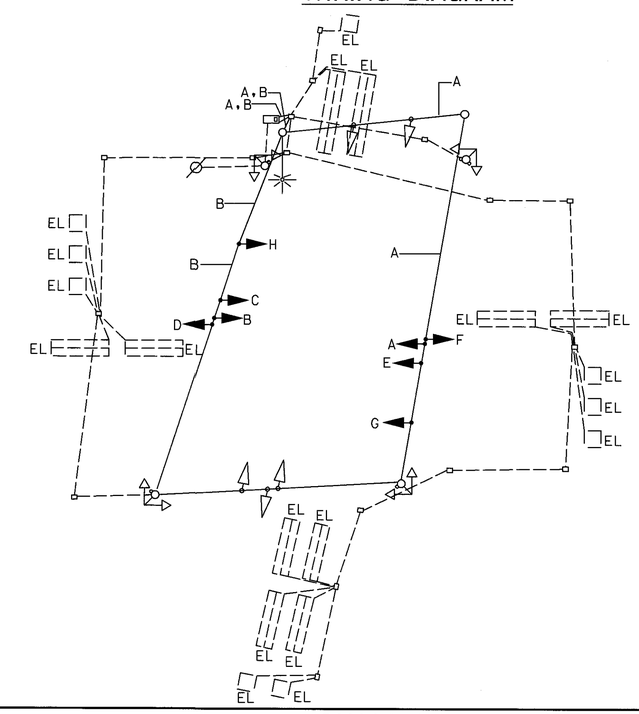

KEY

A, B } 5 CONDUCTOR ELECTRICAL CABLE (NO. 14 AWG)

C, D, E, F, G, H } USE EXISTING SIGNAL HEAD WIRING

EL - EXISTING LOOPWIRE

PHASE CHART

	1	2	3	4	5	6	7	8	9	10	11	12	13	14	15	16	17	18	19	20	21
PHASE 1 AND 5	←G—	←G—	R	R	←G—	←G—	R	R	R	R	R	R	R	DW	DW	DW	DW	DW	DW	DW	DW
1 AND 5 CHANGE TO 1 AND 6,2 AND 5,OR 2 AND 6																					
PHASE 1 AND 6	←G—	←G—	G	G	←R—	←R—	R	R	R	R	R	R	R	DW	DW	DW	DW	DW	DW	DW	DW
1 AND 6 CHANGE	←Y—	←Y—	Y	Y	←R—	←R—	R	R	R	R	R	R	R	DW	DW	DW	DW	DW	DW	DW	DW
PHASE 2 AND 5	←R—	←R—	R	R	←G—	←G—	G	G	R	R	R	R	R	DW	DW	DW	DW	DW	DW	DW	DW
2 AND 5 CHANGE	←R—	←R—	R	R	←Y—	←Y—	Y	Y	R	R	R	R	R	DW	DW	DW	DW	DW	DW	DW	DW
PHASE 2 AND 6	←R—	←R—	G	G	←R—	←R—	G	G	R	R	R	R	R	WK	WK	WK	WK	DW	DW	DW	DW
PED CLEAR	←R—	←R—	G	G	←R—	←R—	G	G	R	R	R	R	R	FL\DW	FL\DW	FL\DW	FL\DW	DW	DW	DW	DW
2 AND 6 CHANGE	←R—	←R—	Y	Y	←R—	←R—	Y	Y	R	R	R	R	R	DW	DW	DW	DW	DW	DW	DW	DW
PHASE 4 AND 8	←R—	←R—	R	R	←R—	←R—	R	R	G	G	G	G	G	DW	DW	DW	DW	DW	DW	DW	DW
4 AND 8 CHANGE	←R—	←R—	R	R	←R—	←R—	R	R	Y	Y	Y	Y	Y	DW	DW	DW	DW	DW	DW	DW	DW
PHASE 4 AND 8 ALT	←R—	←R—	R	R	←R—	←R—	R	R	G	G	G	G	G	DW	DW	DW	DW	WK	WK	WK	WK
PED CLEAR	←R—	←R—	R	R	←R—	←R—	R	R	G	G	G	G	G	DW	DW	DW	DW	FL\DW	FL\DW	FL\DW	FL\DW
4 AND 8 CHANGE ALT	←R—	←R—	R	R	←R—	←R—	R	R	Y	Y	Y	Y	Y	DW	DW	DW	DW	DW	DW	DW	DW
FLASHING OPERATION	FL /R	FL /R	FL /Y	FL /Y	FL /R	FL /R	FL /Y	FL /Y	FL /R	FL /R	FL /R	FL /R	FL /R	DARK	DARK	DARK	DARK	DARK	DARK	DARK	DARK

SABRA, WANG & ASSOCIATES, INC.
1506 JOH AVENUE
SUITE 180
BALTIMORE, MD 21227
(410) 737-6564
WWW.SABRA-WANG.COM

MARYLAND DOT - STATE HIGHWAY ADMINISTRATION
Office of Traffic & Safety
TRAFFIC ENGINEERING DESIGN DIVISION
GENERAL INFORMATION PLAN

MD 108 (SANDY SPRING ROAD) AND OLD BALTIMORE ROAD

DRAWN BY: James Allen Jr.	F.A.P. NO. MS2B452	TS NO. 3118C	SHEET NO.
CHECKED BY: S. Renzi	S.H.A. NO.		
SCALE: NTS	COUNTY: MONTGOMERY	T.I.M.S. NO. F274	2 OF 2
DATE: September, 2002	LOG MILE: 15010814.37		

R:\00-47\TASK 41\DWG\F274GP01.DGN