DRILL HOLES

BORDER REV. DATE: June 1, 2004

FIBER-OPTIC SIGNAL DISPLAY CHART

STATIONS 1 - 4,6

	1	2	3	4	5	6
OFF PEAK 7:00 PM TO 6:30 AM	↓ (GREEN)	(TWO-WAY LEFT)	X (RED)	↓ (GREEN)	(TWO-WAY LEFT)	X (RED)
A.M. OFF PEAK CHANGE	↓ (GREEN)	(TWO-WAY LEFT)	X (RED)	↓ (GREEN)	X (YELLOW)	X (RED)
AM OFF PEAK CHANGE RED CLEAR	↓ (GREEN)	(TWO-WAY LEFT)	X (RED)	↓ (GREEN)	X (RED)	X (RED)
AM PEAK 6:30 AM TO 9:30 AM	↓ (GREEN)	↓ (GREEN)	X (RED)	↓ (GREEN)	X (RED)	X (RED)
AM CHANGE	↓ (GREEN)	(TWO-WAY LEFT)	X (RED)	↓ (GREEN)	X (RED)	X (RED)
OFF PEAK 9:30 AM TO 4:00 PM	↓ (GREEN)	(TWO-WAY LEFT)	X (RED)	↓ (GREEN)	(TWO-WAY LEFT)	X (RED)
P.M. OFF PEAK CHANGE	↓ (GREEN)	X (YELLOW)	X (RED)	↓ (GREEN)	(TWO-WAY LEFT)	X (RED)
PM OFF PEAK CHANGE RED CLEAR	↓ (GREEN)	X (RED)	X (RED)	↓ (GREEN)	(TWO-WAY LEFT)	X (RED)
PM PEAK 4:00 PM TO 7:00 PM	↓ (GREEN)	X (RED)	X (RED)	↓ (GREEN)	↓ (GREEN)	X (RED)
PM CHANGE	↓ (GREEN)	X (RED)	X (RED)	↓ (GREEN)	(TWO-WAY LEFT)	X (RED)

FIBER-OPTIC SIGNAL DISPLAY CHART

STATION 7

	1	2	3
OFF PEAK 7:00 PM TO 6:30 AM	X (RED)	↓ (GREEN)	X (RED)
A.M. OFF PEAK CHANGE	X (RED)	↓ (GREEN)	X (RED)
A.M. OFF PEAK CHANGE RED CLEAR	X (RED)	↓ (GREEN)	X (RED)
AM PEAK 6:30 AM TO 9:30 AM	X (RED)	↓ (GREEN)	X (RED)
AM CHANGE	X (RED)	↓ (GREEN)	X (RED)
OFF PEAK 9:30 AM TO 4:00 PM	X (RED)	↓ (GREEN)	X (RED)
P.M. OFF PEAK CHANGE	X (RED)	↓ (GREEN)	X (RED)
P.M. OFF PEAK CHANGE RED CLEAR	X (RED)	↓ (GREEN)	X (RED)
PM PEAK 4:00 PM TO 7:00 PM	X (RED)	↓ (GREEN)	X (RED)
PM CHANGE	X (RED)	↓ (GREEN)	X (RED)

PROJECT DESCRIPTION

This project involves the reconstruction of a Reversible Lane System on MD 97 from I-495 south approximately 2300' to Luzerne Avenue in Montgomery County. It includes the installation of fiber optic signs, the replacement of wiring, signals, signal mounting brackets and the replacement of strain poles with new mast arm poles at 7 span wire sites along MD 97.

SYSTEM OPERATION

The system is in operation Monday thru Friday providing 4-lanes of thru traffic for southbound MD 97 in the AM Peak from 6:30 AM to 9:00 AM. At 9:00 AM, the off-peak operation shall begin consisting of 3 thru lanes in each direction and a two-way left turn lane. At 3:30 PM, the PM Peak begins providing 4-lanes of traffic for northbound MD 97 until 7:00 PM at which time the off-peak operation will again commence.

SPECIAL NOTE

All field wiring to the controller cabinet shall be terminated to the appropriate controller cabinet connectors by the Contractor and labeled. All other controller cabinet wiring will be performed by the MCDOT Forces. Contact Mr. Keith Lord (MCDPWT) at (301) 279-1292 seventy-two hours in advance of intended work.

All fiber optic signs are to be delivered to SHA signal shop for testing.

The contact persons for District #3 (Montgomery County) are as follows:

Mr. Lee Starkloff
Assistant District Engineer - Traffic
Phone: (301) 513-7318

Mr. Wayne Mowdy
Assistant District Engineer - Maintenance
Phone: (301) 513-7304

Mr. Augie Rebish
District Engineer - Utility
Phone: (301) 513-7350

Mr. Richard L. Daff, Sr.
Chief, Traffic Operations Division
Phone: (410) 787-7630

Mr. Ed Rodenhizer
Signal Shop
410-787-7652

Mr. Sonny Bailey
Sign Shop
410-787-7670

The power company representative is:

Mr. Steve Custer
PEPCO Customer Design
201 W Guide Dr.,
Rockville, MD 20850
Phone: 301 548-4333

STATION #1 WIRING DIAGRAM

WIRING KEY

- A, B } 7-CONDUCTOR ELECTRICAL CABLE (NO. 14 A.W.G)
- C, D, E, F, M, N } 5-CONDUCTOR ELECTRICAL CABLE (NO. 14 A.W.G)
- G - 12-PAIR VOICE GRADE INTERCONNECT CABLE (SELF SUPPORTING) FROM STATION #2
- H - 12-PAIR VOICE GRADE INTERCONNECT CABLE (SELF SUPPORTING)
- J - STRANDED BARE COPPER GROUND WIRE (NO. 6 A.W.G.)
- K - (3) 1-CONDUCTOR ELECTRICAL CABLE (NO. 250 KCMIL)
- L - (2) 1-CONDUCTOR ELECTRICAL CABLE (NO. 4 A.W.G.)
- PS - PROPOSED OVERHEAD SERVICE TO BE INSTALLED BY PEPCO
- + - GROUND ROD

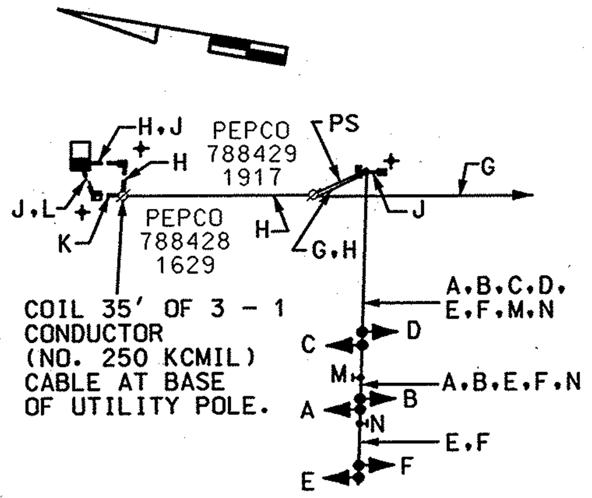

COIL 35' OF 3 - 1 CONDUCTOR (NO. 250 KCMIL) CABLE AT BASE OF UTILITY POLE.

STATION #2 WIRING DIAGRAM

WIRING KEY

- A, B } 7-CONDUCTOR ELECTRICAL CABLE (NO. 14 A.W.G)
- C, D, E, F, K, L } 5-CONDUCTOR ELECTRICAL CABLE (NO. 14 A.W.G)
- G - 12-PAIR VOICE GRADE INTERCONNECT CABLE (SELF SUPPORTING) TO STATION #1
- H - 12-PAIR VOICE GRADE INTERCONNECT CABLE (SELF SUPPORTING) TO STATION #3
- J - STRANDED BARE COPPER GROUND WIRE (NO. 6 A.W.G.)
- PS - PROPOSED OVERHEAD SERVICE TO BE INSTALLED BY PEPCO
- + - GROUND ROD

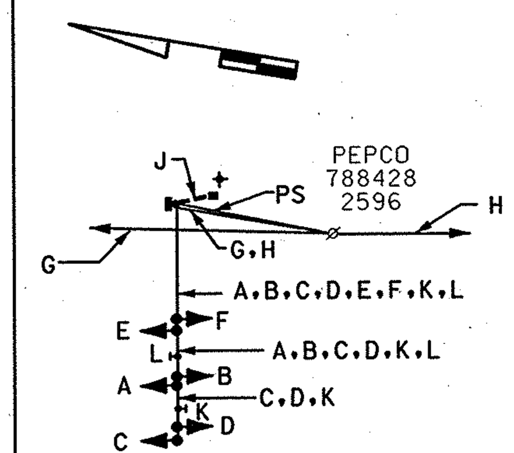

STATION #7 WIRING DIAGRAM

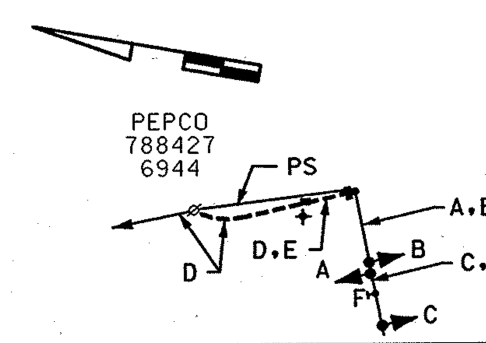

WIRING KEY

- A, B } 7-CONDUCTOR ELECTRICAL CABLE (NO. 14 A.W.G)
- C, F } 5-CONDUCTOR ELECTRICAL CABLE (NO. 14 A.W.G)
- D - 12-PAIR VOICE GRADE INTERCONNECT CABLE (SELF SUPPORTING) FROM STATION #6
- E - STRANDED BARE COPPER GROUND WIRE (NO. 6 A.W.G.)
- PS - PROPOSED OVERHEAD SERVICE TO BE INSTALLED BY PEPCO

STATION #3 WIRING DIAGRAM

WIRING KEY

- A, B } 7-CONDUCTOR ELECTRICAL CABLE (NO. 14 A.W.G)
- C, D, E, F, K, L } 5-CONDUCTOR ELECTRICAL CABLE (NO. 14 A.W.G)
- G - 12-PAIR VOICE GRADE INTERCONNECT CABLE (SELF SUPPORTING) FROM STATION #2
- H - 12-PAIR VOICE GRADE INTERCONNECT CABLE (SELF SUPPORTING) FROM STATION #4
- J - STRANDED BARE COPPER GROUND WIRE (NO. 6 A.W.G.)
- PS - PROPOSED OVERHEAD SERVICE TO BE INSTALLED BY PEPCO
- + - GROUND ROD

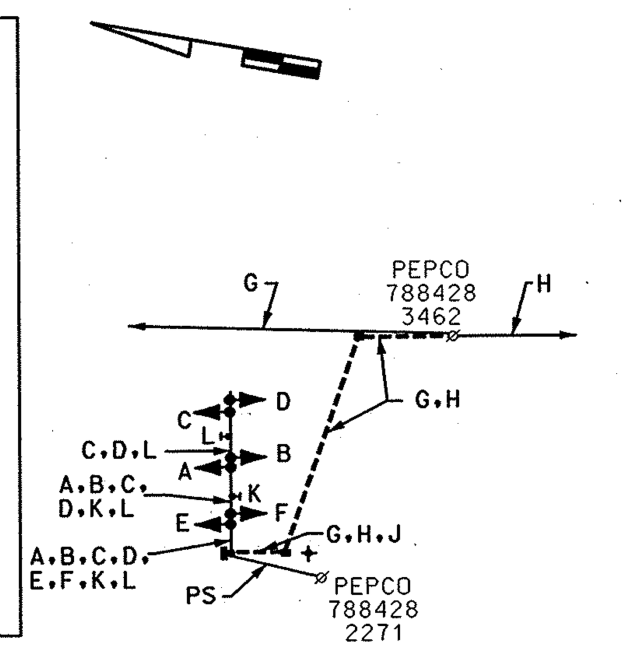

STATION #4 WIRING DIAGRAM

WIRING KEY

- A, B } 7-CONDUCTOR ELECTRICAL CABLE (NO. 14 A.W.G)
- C, D, E, F, K, L } 5-CONDUCTOR ELECTRICAL CABLE (NO. 14 A.W.G)
- G - 12-PAIR VOICE GRADE INTERCONNECT CABLE (SELF SUPPORTING) FROM STATION #3
- H - 12-PAIR VOICE GRADE INTERCONNECT CABLE (SELF SUPPORTING) FROM STATION #5
- J - STRANDED BARE COPPER GROUND WIRE (NO. 6 A.W.G.)
- PS - PROPOSED OVERHEAD SERVICE TO BE INSTALLED BY PEPCO
- + - GROUND ROD

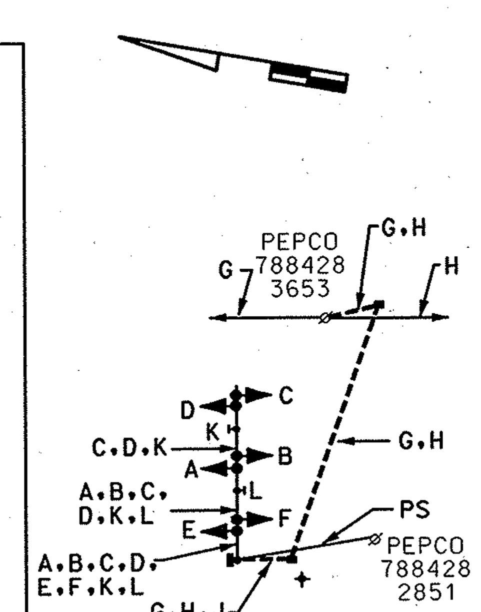

STATION #5 WIRING DIAGRAM

WIRING KEY

- A, B, C, D, E, F } 5-CONDUCTOR ELECTRICAL CABLE (NO. 14 A.W.G)
- G - 12-PAIR VOICE GRADE INTERCONNECT CABLE (SELF SUPPORTING) TO STATION #4
- H - 12-PAIR VOICE GRADE INTERCONNECT CABLE (SELF SUPPORTING) TO STATION #6
- J - STRANDED BARE COPPER GROUND WIRE (NO. 6 A.W.G.)
- PS - PROPOSED OVERHEAD SERVICE TO BE INSTALLED BY PEPCO
- + - GROUND ROD

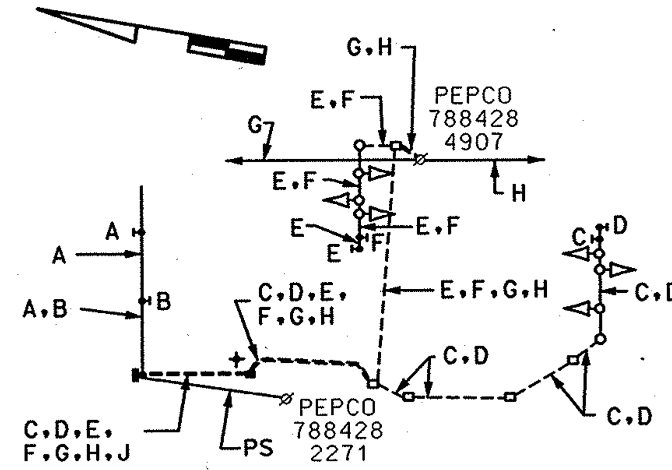

STATION #6 WIRING DIAGRAM

WIRING KEY

- A, B } 7-CONDUCTOR ELECTRICAL CABLE (NO. 14 A.W.G)
- C, D, E, F, K, L } 5-CONDUCTOR ELECTRICAL CABLE (NO. 14 A.W.G)
- G - 12-PAIR VOICE GRADE INTERCONNECT CABLE (SELF SUPPORTING) TO STATION #5
- H - 12-PAIR VOICE GRADE INTERCONNECT CABLE (SELF SUPPORTING) TO STATION #7
- J - STRANDED BARE COPPER GROUND WIRE (NO. 6 A.W.G.)
- PS - PROPOSED OVERHEAD SERVICE TO BE INSTALLED BY PEPCO
- + - GROUND ROD

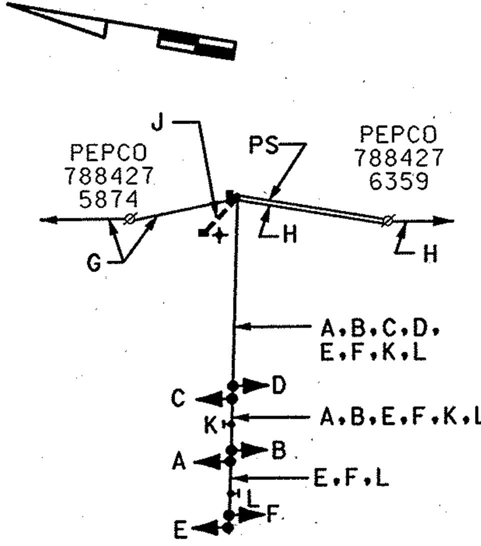

MD 97 (GEORGIA AVE) LANE CONTROL SIGNALS

There are 7 Stations. 5 Stations have six heads each and the South most Station consists of only three heads. Station 5 shall only consist of Fiber Optic signs.

The 5 Stations with reversble lane control heads should be wired with 7 conductor IMSA Spec. 19-1, Number 14 AWG wire (See wiring diagrams).

Conductor	Color	Termination
1	Black	Chassis Ground
2	White	AC Neutral
3	Red	Red (X)
4	Green	Green (Arrow)
5	Orange	Yellow (X)
6	Blue	Two Way Left
7	White/Black	Spare

NON-CHANGING LANE CONTROL HEADS

The 7 Stations with Non-changing lane indications are to be wired with 5 conductor IMSA Spec 19-1, Number 14 AWG wire. There is a total of 27 lane control heads with non-changing indications.

Conductor	Color	Termination
1	Black	Chassis Ground
2	White	AC Neutral
3	Red	Red (X) or Green (Arrow)
4	Green	Spare
5	Orange	Spare

A. EQUIPMENT TO BE SUPPLIED BY S.H.A..

	ITEM NO.	DESCRIPTION	QUANTITY
	9042	Controller ASC II with telemetry	7 EA
	9043	Controller cabinet, size "5" (pole mount)	7 EA
	9044	Controller cabinet, size "6" (base mount)	1 EA
	9045	Controller master ASC 2M with telemetry.	1 EA
	9570	Sheet aluminum signs to consist of: (ground mount)	6.5 SF
		R3-7R"RIGHT TURN MUST TURN RIGHT" sign (30"x30")	1 EA
	9571	Sheet aluminum signs to consist of: (mast arm mount)	~~177 SF~~ 237 SF
1		~~R3-8 "THRU RIGHT/ RIGHT ONLY (Symbolic)" (60" x 36") sign~~	X ~~EA~~
		R3-5R "RIGHT TURN ONLY" sign, (30" x 36")	2 EA
		R3-5L "LEFT TURN ONLY" sign, (30" x 36")	2 EA
		SPEC "OBEY LANE CONTROL SIGNALS" sign. (48" X 36")	10 EA
		SPEC "OBEY LANE CONTROL SIGNALS" sign. (48" X 36") (dual faced)	1 EA
1		SPEC "MD 390 16th sTREET (Thru-right arrow)/ ONLY (Right arrow).	1 EA

B. EQUIPMENT TO BE FURNISHED AND/OR INSTALLED BY THE CONTRACTOR

	ITEM NO.	DESCRIPTION	QUANTITY
	1001	Maintenance of traffic per assignment.	3 EA
	2001	Class 2 Excavation.	6 C.Y.
	2002	Test Pit Excavation	8 C.Y.
	5007	Heat applied white permanent preformed thermoplastic pavement marking letter. (only) 2 Each	8 EA
	5008	Heat applied white permanent preformed thermoplastic pavement marking arrow. (right).	2 EA
	5008	Heat applied white permanent preformed thermoplastic pavement marking arrow. (thru-right)	2 EA
	6005	4" concrete sidewalk.	520 S.F.
	8001	Concrete foundation.	34 C.Y.
	8023	16' pole w/ special 15' T dimension and 50' mast arm.	1 EA
1	8024	Mast arm pole 15' T and 60' (cut to 30') mast arm.	1 EA
	8029	Remove and dispose of existing material and equipment per assignment.	1 EA
	8034	3" electrical conduit riser (PVC).	120 LF
	8037	Cable - 1 conductor (No. 250 KCMIL), Cu, USE	120 L.F.
	8042	Wood sign supports 4" x 4".	16 L.F.
	8044	No. 6 AWG stranded bare copper ground wire.	140 L.F.
	8047	Weatherhead, 3 inch	7 EA

B. EQUIPMENT TO BE FURNISHED AND/OR INSTALLED BY THE CONTRACTOR

	ITEM NO.	DESCRIPTION	QUANTITY
	8050	4" schedule 80 rigid polyvinyl chloride - bored.	260 L.F.
	8051	2" schedule 80 rigid polyvinyl chloride - trenched.	15 L.F.
1	8052	3" schedule 80 rigid polyvinyl chloride - trenched.	160 ~~150~~ L.F.
	8053	4" schedule 80 rigid polyvinyl chloride - trenched.	30 L.F.
	8056	4" schedule 80 rigid polyvinyl chloride - slotted.	105 L.F.
	8058	Metered service pedestal.	1 EA
	8059	Electrical utility service equipment (120/240 V, 1 phase 3 wire system).	7 EA
	8061	Electrical cable 1-conductor No. 4 AWG THHN/THWN.	30 L.F.
1	8067	Furnish and install electrical handhole.	11 ~~10~~ EA
	8069	Install ground mounted sign.	6.5 SF
1	8070	Install overhead sign.	237 ~~177~~ SF
	8082	12-pair communication cable, self-supporting (overhead).	4150 L.F.
	8091	Ground rod ¾" dia. x 10' length.	9 EA
1	8096	Cut, clean, galvanize and cap traffic signal structure.	1 EA
	8101	Electrical cable - 5 conductor (No. 14 AWG).	3565 L.F.
	8102	Electrical cable - 7 conductor (No. 14 AWG).	975 L.F.
	8111	Install controller and cabinet pole mount.	7 EA
	Neg.	1-Way Lane Control Signal Head (with standard mounting bracket arm) single display (RED X).	13 EA
	Neg.	1-Way Lane Control Signal Head (with standard mounting bracket arm) single display (GREEN X).	12 EA
	Neg.	1-Way Lane Control Signal Head (with standard mounting bracket arm) multiple display.	11 EA
	Neg.	Fiber optic sign. R3-6 "NO LEFT OR UTURN (SYMBOLIC) / LEFT TURN ONLY (SYMBOLIC)" sign (30"x36') mast arm mounted.	5 EA
	Neg.	Fiber optic sign. R3-6 "NO LEFT OR UTURN (SYMBOLIC)" sign (30"x36') mast arm mounted.	14 EA
	Neg.	Lash proposed 12-pair communication cable to existing fiber optic cable	4150 LF
	~~Neg.~~	~~16' pole w/ special 15' T dimension and 75' mast arm.~~	~~6 EA~~
1	Neg.	16.5' pole w/special 15' "T" dimension and 62' mast arm	6 EA

1 REDLINE REVISION 1/4/06

STREET TRAFFIC STUDIES, LTD.
400 Crain Hwy.,N.W.
Glen Burnie,MD 21061
Ph (410) 590-5500
Fax (410) 590-6637

4693GI.dgn D6-2

SHA
STATE OF MARYLAND
DEPARTMENT OF TRANSPORTATION
STATE HIGHWAY ADMINISTRATION

MD 97 (GEORGIA AVE): FROM I-495 TO LUZERNE AVE

(REVERSIBLE LANE STATIONS)

SCALE none DATE 12-7-05 CONTRACT NO. AT7185185

DESIGNED BY		COUNTY	MONTGOMERY
DRAWN BY	RC	LOGMILE	
CHECKED BY		TIMS NO.	F729
F.A.P. NO.		TOD NO.	

TS NO. 203A | DRAWING NO. 5 OF 5 | SHEET NO. OF

PLOTTED: $DATETIME$
FILE: $FILE$

...\4000's\4693\4693gi.dgn Jan. 05, 2006 13:42:52