P – SIZE BASE MOUNTED CABINET LAYOUT

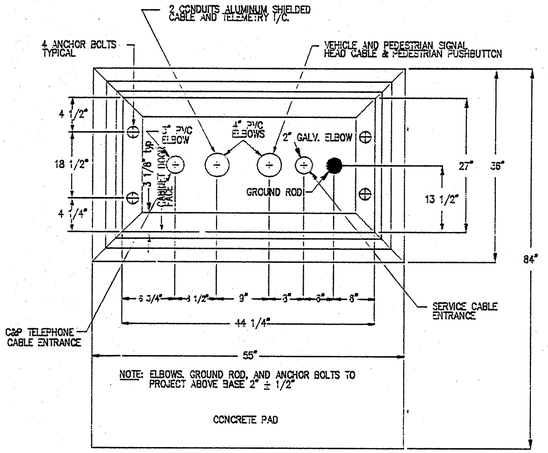

M – SIZE BASE MOUNTED CABINET LAYOUT

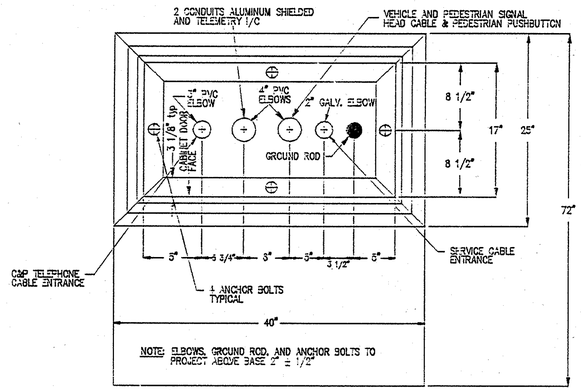

POLE MOUNTED CABINET

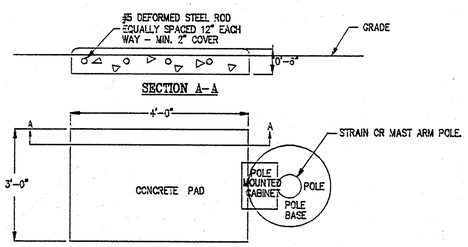

NOTES:
1. CONCRETE SHALL BE POURED AGAINST UNDISTURBED EARTH.
2. CONCRETE SHALL BE SHA MIX #2.
3. FINISH SMOOTH WITH A 3/4" CHAMFER ON THE TOP EDGE.
4. DELETE PAD IF INSTALLED IN A PAVED SIDEWALK AREA.
5. CABINET SHALL OVERHANG BASE BY 8" APPROX. AND SHALL BE CENTERED.

BASE MOUNTED CABINET

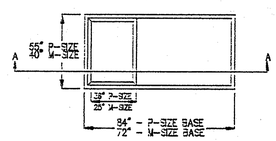

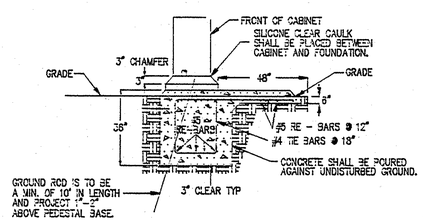

SECTION A – A

APPROVED 10/5/89
DEPUTY CHIEF ENGINEER – TRAFFIC

APPROVAL • SHA REVISIONS	APPROVAL • FEDERAL HIGHWAY ADMINISTRATION

MDOT – STATE HIGHWAY ADMINISTRATION
Office of Traffic
TRAFFIC ENGINEERING DIVISION

BASE/POLE MOUNTED CABINET

Section: SIGNAL DESIGN Date: 8/89 Std no: 3

LIGHTING ARM AND LUMINAIRE PLACED ON TRAFFIC SIGNAL STRAIN POLES

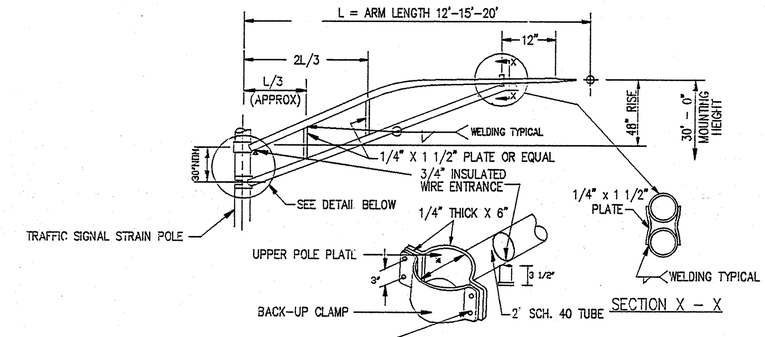

* NOTE
DIMENSIONS VARY FROM 8" TO 12". CONTRACTOR TO FIELD VERIFY PRIOR TO APPROVAL & REQUISITION.

MATERIALS
- ALL CLAMPS & BARS SHALL MEET ASTM A36
- ALL TUBES SHALL MEET ASTM A53 GR.B OR A501
- ARM ASSEMBLY SHALL BE GALV. PER ASTM A123. AFTER FABRICATION.

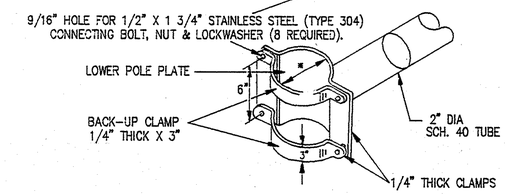

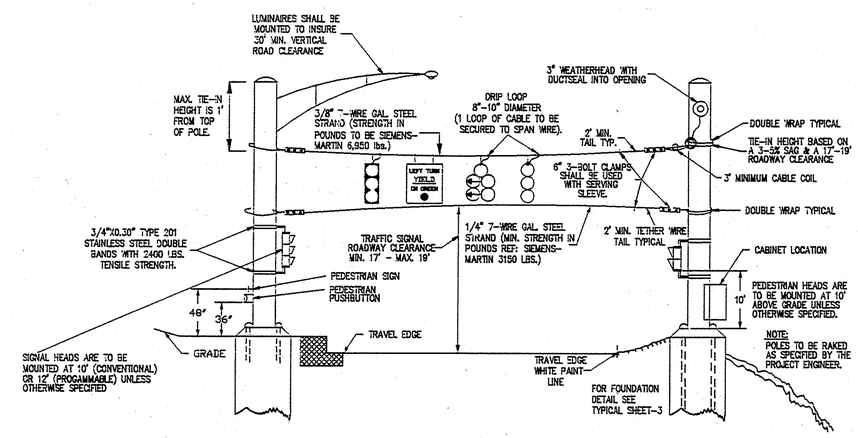

NOTES :

1. SPAN WIRE RINGS SHALL BE 3" MIN. DIA. OR MAX 50% FILL WHICHEVER IS LARGER AND 10" MAX. SPACING.
2. ALL THREE (3) BOLT SPAN WIRE CLAMPS FURNISHED SHALL CONFORM TO THE NATIONAL ELECTRICAL MANUFACTURERS ASSOCIATION (NEMA) PUBLICATION NUMBER PH23–1984 REVISED 1977 AND AS HEREIN INDICATED.
   A. SPAN WIRE CLAMPS SHALL CONFORM TO NEMA PH23–1984 REVISED 1977; DATA SHEET NUMBER 2.
   B. THREE (3) BOLT SPAN WIRE CLAMPS SHALL CONFORM TO NEMA PH23–1084, REVISED 1977, SUBSECTIONS 3.2.2, 4.1(B), AND 7.1 FOR 1/2"–13 TYPE II BOLTS.
   C. THE SUCCESSFUL BIDDER SHALL SUPPLY CERTIFICATION FROM AN INDEPENDENT TESTING LABORATORY THAT A RANDOM SAMPLING OF SPAN WIRE CLAMPS TO BE SUPPLIED HAS MET ALL SPECIFICATIONS.
3. SPAN WIRE MOUNTED OPTICALLY PROGRAMMED SIGNAL HEADS, 5 SECTION SIGNAL HEADS, AND SIGNS GREATER THAN 36"X42" ARE TO BE BOTTOM TETHERED WITH 1/4" SPAN WIRE.
4. CABINET TO BE MOUNTED AT FOLLOWING HEIGHTS (MEASURED FROM GRADE TO BOTTOM OF CABINET):
   M–CABINET– 30"–3"LB CONDUIT BODY.
   H–CABINET– 36"–2"LB CONDUIT BODY.
5. POLE PLACEMENT FOR:
   A. CLOSED SECTION – A MIN. OF 2' IS REQUIRED BETWEEN POLE FACE AND FACE OF THE CURB.
   B. OPEN SECTION – A MIN. OF 6' IS REQUIRED BETWEEN FACE OF POLE AND TRAVEL EDGE WHITE PAINT LINE.

APPROVED 10/5/89
DEPUTY CHIEF ENGINEER – TRAFFIC

APPROVAL • SHA REVISIONS	APPROVAL • FEDERAL HIGHWAY ADMINISTRATION

MDOT – STATE HIGHWAY ADMINISTRATION
Office of Traffic
TRAFFIC ENGINEERING DIVISION

PLACEMENT OF STRAIN POLE AND INCIDENTAL HARDWARE

SHEET NO 58 OF 63

Section: SIGNAL DESIGN Date: 8/89 Std no: 4