US 13 BUSINESS IS ASSUMED TO RUN IN A NORTH-SOUTH DIRECTION

PROPOSED LED SIGNALS

1 — 12"/8"; 2 — 12"; 3 — 12"; 4,5,6,7,8,9,10 — 12"; 11,12 — 16" LED COUNTDOWN PEDESTRIAN SIGNAL

PROPOSED VIDEO DETECTION

a,b

ACCESSIBLE PEDESTRIAN PUSHBUTTON AND SIGN

17 — R10-3(1) 9"x15"; 18 — R10-3(1) 9"x15"

NEMA PHASING

Ø1 Ø2 Ø4 Ø6 Ø4 ALT.

FLASHING OPERATION

PROPOSED SIGNS

13 — D-3(1) (VAR.x32") DUAL FACED

14 — SHIELD ASSEMBLY (36"x75")

16 — D-3(1) (VAR.x16")

EXISTING SIGNS TO REMAIN

19

NOTE:
PHASES ASSOCIATED BY A DASHED LINE WILL OPERATE CONCURRENTLY.
PHASES ASSOCIATED BY A SOLID LINE WILL NOT OPERATE CONCURRENTLY.

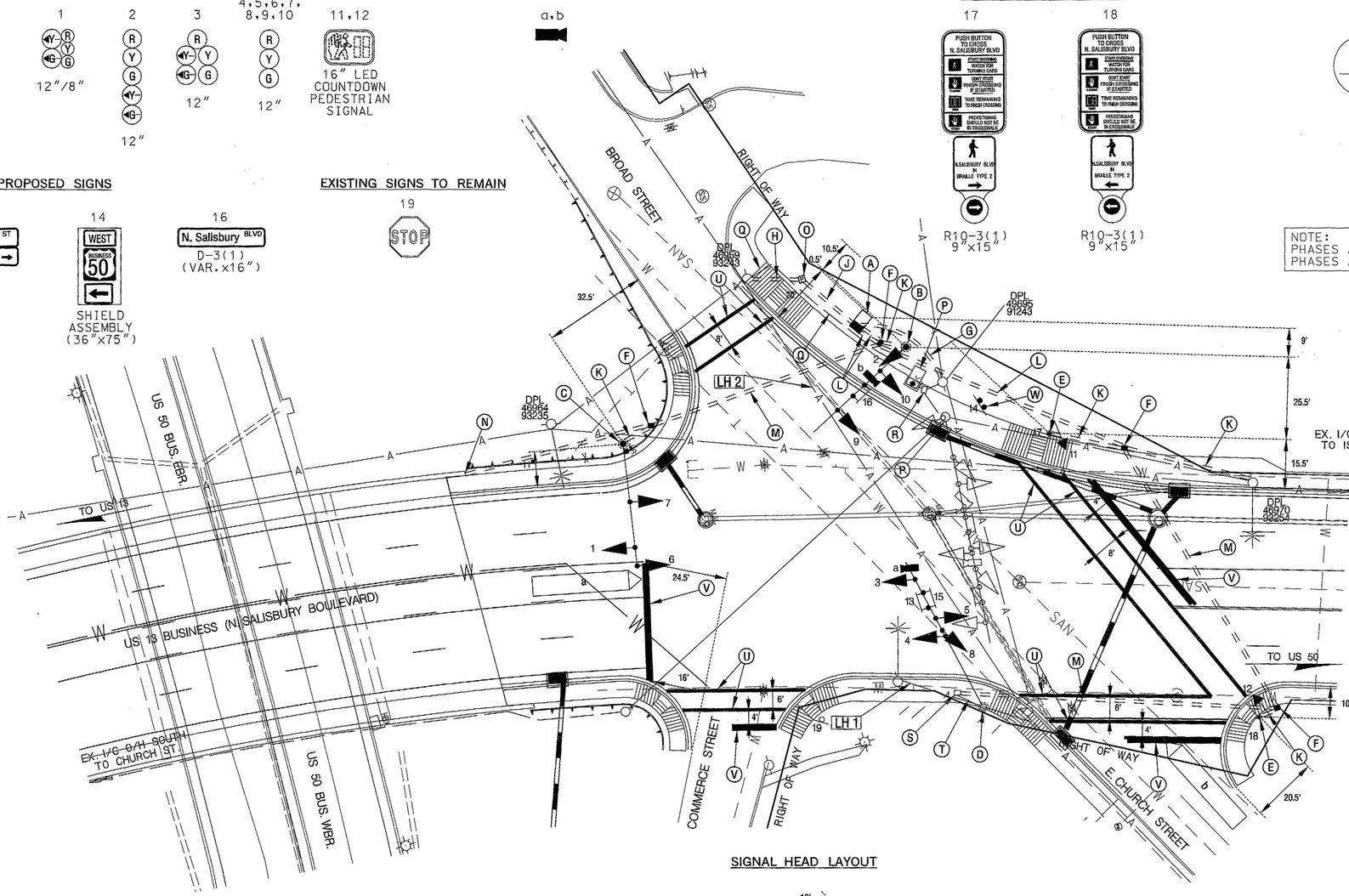

SIGNAL HEAD LAYOUT

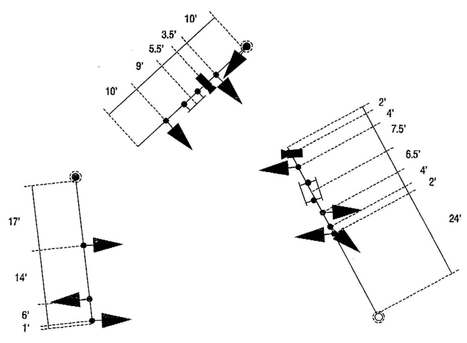

LINE HEIGHTS (LH) 1
POWER TO STREET - 32'+ LIGHT

LINE HEIGHTS (LH) 2	
COMMUNICATION 1	- 25'+
SECONDARY	- 30'+

GENERAL NOTES

1. MAINTENANCE OF TRAFFIC WILL BE HANDLED BY THE CONTRACTOR UTILIZING MDSHA STANDARD TYPICALS FOR TRAFFIC CONTROL.
2. THE CONTRACTOR SHALL CONTACT MISS UTILITY TO VERIFY ALL UNDERGROUND UTILITIES PRIOR TO THE INSTALLATION OF PROPOSED SIGNAL EQUIPMENT. IF ANY UTILITY CONFLICTS ARISE THE CONTRACTOR SHALL CONTACT THE PROJECT ENGINEER.
3. WITHIN 36 IN. OF UNDERGROUND UTILITY LOCATIONS, THE CONTRACTOR SHALL BE REQUIRED TO EXCAVATE FOR FOUNDATION AND CONDUIT BY HAND.
4. ALL TRAFFIC SIGNAL FOUNDATIONS SHALL BE INSTALLED AT THE FINAL SIDEWALK OR CURB GRADE FOR CLOSED SECTIONS, HIGHEST ROADWAY PROFILE GRADE FOR OPEN SECTIONS, TO MEET CLEARANCES AS SPECIFIED IN MD 816.03, MD 818.01, MD 818.02, MD 818.04. THE CONTRACTOR SHALL VERIFY ULTIMATE GRADES PRIOR TO THE INSTALLATION OF ALL SIGNAL EQUIPMENT.
5. THE CONTRACTOR SHALL INTEGRATE PROPOSED/EXISTING CONCRETE FOUNDATIONS WITH NEW CURB/SIDEWALK RAMP WHERE NECESSARY.
6. THE SHA SIGNAL SHOP WILL BE RESPONSIBLE FOR ALL INTERNAL CABINET WIRING. THE CONTRACTOR SHALL BE RESPONSIBLE FOR ROUTING AND PROPERLY LABELING ALL SIGNAL CABLES.
7. THE CONTRACTOR SHALL REMOVE AND DISPOSE OF ALL ABANDONED ELECTRICAL CABLES.
8. ALL EXISTING TRAFFIC SIGNAL EQUIPMENT REMOVED SHALL BECOME THE PROPERTY OF THE SIGNAL CONTRACTOR UPON COMPLETION OF THE SIGNAL MODIFICATION.
9. THE CONTRACTOR SHALL VERIFY THE PROPOSED POLE AND CABINET LOCATION(S) PRIOR TO INSTALLATION.
10. VIDEO CAMERA LOCATION/ALIGNING SHALL BE COORDINATED WITH THE SHA ENGINEER.
11. LOCATION OF ACCESSIBLE PEDESTRIAN SIGNAL PUSHBUTTONS MUST MEET LOCATION REQUIREMENTS OF MUTCD SEC. 4E.09 AND FIG. 4E.2; AND THE NCHRP PUBLICATION, "ACCESSIBLE PEDESTRIAN SIGNALS: GUIDE TO BEST PRACTICE." IF NOT MET, THE CONTRACTOR IS TO STOP WORK ON PUSHBUTTON LOCATIONS UNTIL THE CONFLICT HAS BEEN RESOLVED. IF NEEDED, A DESIGN WAIVER SHALL BE OBTAINED, APPROVED BY THE DIRECTOR, OFFICE OF TRAFFIC AND SAFETY.
12. PUSHBUTTON IS TO BE LOCATED SO THAT A PEDESTRIAN IN A WHEELCHAIR LOCATED ON THE LEVEL LANDING AREA DOES NOT HAVE TO REACH MORE THAN 18 IN.
13. PUSHBUTTONS ARE TO BE LOCATED SO THAT THEY CAN BE ACTIVATED BY A PERSON IN A WHEELCHAIR FROM A 60 IN. x 60 IN. LEVEL LANDING AREA. A LEVEL LANDING AREA IS AN AREA WITH A CROSS SLOPE OF LESS THAN OR EQUAL TO 2%.
14. THE 10 FT. MINIMUM SEPARATION BETWEEN PUSHBUTTONS IS TO BE MEASURED FROM FACE OF PUSHBUTTON TO FACE OF PUSHBUTTON, NOT CENTER OF POLE TO CENTER OF POLE.
15. PUSHBUTTON ARROWS SHOULD BE TURNED PARALLEL TO THE CROSSWALK FOR WHICH THEY ARE INTENDED.
16. ALL ACCESSIBLE PEDESTRIAN CONTROL EQUIPMENT SHALL BE DELIVERED TO THE SHA SIGNAL SHOP FOR TESTING AND PROGRAMMING PRIOR TO INSTALLATION. CONTACT MR. EDWARD RODENHIZER AT 410-787-7650 TO COORDINATE.
17. THE CONTRACTOR SHALL REMOVE AND REPLACE CONCRETE SIDEWALK AT THE NEAREST JOINT.
18. THE CONTRACTOR SHALL ENSURE THE EXISTING TRAFFIC SIGNAL REMAINS OPERATIONAL UNTIL RECONSTRUCTED TRAFFIC SIGNAL IS FUNCTIONAL. (SEE TRAFFIC CONTROL PLANS FOR DETAILS ON MAINTENANCE OF TRAFFIC.)
19. THE CONTRACTOR SHALL INSTALL THE FINAL STOP LINE AND CROSSWALK PAVEMENT MARKINGS AFTER THE FINAL PAVEMENT SURFACE IS COMPLETE.
20. THE CONTRACTOR SHALL INSTALL ALL CONDUIT/POLE FOUNDATIONS PRIOR TO THE CONSTRUCTION OF SIDEWALK/CURB AND GUTTER THROUGHOUT ALL PHASES OF CONSTRUCTION.

CONSTRUCTION DETAILS

A. INSTALL NEMA SIZE "6" BASE MOUNTED CABINET AND CONTROLLER WITH ALL NECESSARY EQUIPMENT (NOTE: 2-2 IN. AND 2-4 IN. 90 DEGREE BENDS).
B. INSTALL A 21 FT. STEEL POLE WITH A 38 FT. MAST ARM, FOUNDATION, SIGN, LED VEHICULAR TRAFFIC SIGNAL HEADS AND VIDEO DETECTION CAMERA. (NOTE: 1-3 IN. 90 DEGREE PVC BEND)
C. INSTALL A 21 FT. STEEL POLE WITH A 38 FT. MAST ARM, FOUNDATION, AND LED VEHICULAR TRAFFIC SIGNAL HEADS. (NOTE: 1-3 IN. 90 DEGREE PVC BEND)
D. INSTALL A 50 FT. MAST ARM WITH LED VEHICULAR TRAFFIC SIGNAL HEADS, SIGN, AND VIDEO DETECTION CAMERA ON EXISTING STEEL POLE.
E. INSTALL 10 FT. BREAKAWAY PEDESTAL POLE WITH FOUNDATION SHA STD. MD 801.01.01, LED COUNTDOWN PEDESTRIAN SIGNAL HEAD, ACCESSIBLE PUSHBUTTON AND R10-3(1) SIGN TO READ "PUSH BUTTON TO CROSS N. SALISBURY BLVD." (NOTE: 1-3 INCH PVC 90 DEGREE BEND) (SEE NOTE 20).
F. INSTALL ELECTRICAL HANDHOLE.
G. INSTALL 2 IN. SCHEDULE 80 RIGID PVC ELECTRICAL CONDUIT (TRENCHED) - FOR PROPOSED UNDERGROUND TELEPHONE SERVICE. CAP AND MARK CONDUIT, AND LEAVE A 1 FT. STUB WITH PULL STRING AT UTILITY POLE FOR USE BY OTHERS (SEE NOTE 20).
H. INSTALL 4 IN. SCHEDULE 80 RIGID PVC ELECTRICAL CONDUIT (TRENCHED) - FOR PROPOSED UNDERGROUND POWER SERVICE. CAP AND MARK CONDUIT, AND LEAVE A 1 FT. STUB WITH PULL STRING AT UTILITY POLE FOR USE BY OTHERS (SEE NOTE 20).
J. INSTALL 2 IN. SCHEDULE 80 RIGID PVC ELECTRICAL CONDUIT (TRENCHED) (SEE NOTE 20).
K. INSTALL 3 IN. SCHEDULE 80 RIGID PVC ELECTRICAL CONDUIT (TRENCHED) (SEE NOTE 20).
L. INSTALL 4 IN. SCHEDULE 80 RIGID PVC ELECTRICAL CONDUIT (TRENCHED) (SEE NOTE 20).
M. INSTALL 4 IN. SCHEDULE 80 RIGID PVC ELECTRICAL CONDUIT (BORED) (SEE NOTE 20).
N. TIE PROPOSED CONDUIT INTO EXISTING BRIDGE PARAPET CONDUIT.
O. INSTALL METERED SERVICE PEDESTAL (NOTE: 2-2 IN. 90 DEGREE PVC BENDS).
P. REMOVE AND DISPOSE OF EXISTING TRAFFIC SIGNAL EQUIPMENT. REMOVE FOUNDATION 12 IN. BELOW GRADE.
Q. ABANDON EXISTING CONDUIT; CAP AT NEAREST HANDHOLE(S).
R. REMOVE EXISTING ELECTRICAL HANDHOLE. CAP AND ABANDON EXISTING CONDUIT(S).
S. USE EXISTING HANDHOLE.
T. USE EXISTING CONDUIT.
U. INSTALL 12 IN. WHITE PREFORMED THERMOPLASTIC PAVEMENT MARKINGS FOR CROSSWALK.
V. INSTALL 24 IN. WHITE PREFORMED THERMOPLASTIC PAVEMENT MARKINGS FOR STOPLINE.
W. INSTALL GROUND MOUNTED SIGN ON TWO 4 IN. x 6 IN. WOOD POSTS.

STV Incorporated
engineers /architects /planners /construction managers
7125 Ambassador Road Baltimore, MD 21244-2722 (410) 944-9112

BY: guiliamc

UTILITY LEGEND

—E—E—	ELECTRIC CABLES	—SD—SD—	STORM DRAIN
—A—A—	AERIAL CABLES	—G—G—	GAS MAIN
—T—T—	TELEPHONE CABLES	—W—W—	WATER MAIN
—F—F—	FIBER-OPTIC	—S—S—	SEWER MAIN

APPROVALS	
TEAM LEADER	ORIGINAL ON FILE
ASST. DIV. CHIEF	
DIVISION CHIEF	
OFFICE DIRECTOR	

REVISIONS			
S3	RECONSTRUCT SIGNAL DUE TO NEW BRIDGE GEOMETRICS SHA# W16495180	11/2008	
STV	MCG		
E2	RECONSTRUCT SIGNAL DUE TO NEW BRIDGE GEOMETRICS SHA# W16495180	11/2008	
STV	MCG		
E1	RECONSTRUCT SIGNAL DUE TO NEW BRIDGE GEOMETRICS SHA# W16495180	11/2008	
STV	MCG		

STATE OF MARYLAND
DEPARTMENT OF TRANSPORTATION
STATE HIGHWAY ADMINISTRATION

OFFICE OF TRAFFIC & SAFETY
TRAFFIC ENGINEERING DESIGN DIVISION

US 13 BUSINESS (NORTH SALISBURY BOULEVARD)

AT BROAD STREET /E. CHURCH STREET

ULTIMATE SIGNAL

SIGNALIZATION PLAN SHEET

SCALE 1" = 20' ADVERTISED DATE 020884 CONTRACT NO. WI-633-502-185

DESIGNED BY THOMAS ZAYDEL
DRAWN BY THOMAS ZAYDEL
CHECKED BY DENNIS DODA JR.
F.A.P. NO.
COUNTY WICOMICO
LOGMILE 22B01305.64
TIMS NO. J116
TOD NO.

TS NO.10022-E3 | DRAWING SG-09 OF 10 | SHEET NO. OF

PLOTTED: Friday, November 14, 2008 AT 08:33 AM
FILE: I:\PROJECTS\0312121\0312121_0028\Drawings\TRA\US 13 Business at US 50 Bridge\Drawings\Broad\pSG-P009_US13B_Ultimate.dgn