PROJECT DESCRIPTION

GENERAL

THIS PROJECT INVOLVES THE INSTALLATION OF ACCESIBLE PEDESTRIAN SIGNAL EQUIPMENT AT THE INTERSECTION OF MD 24 (VIETNAM VETERANS MEMORIAL HIGHWAY) AND BOULTON STREET IN HARFORD COUNTY, MARYLAND. MD 24 (VIETNAM VETERANS MEMORIAL HIGHWAY) IS ASSUMED TO RUN IN A NORTH-SOUTH DIRECTION.

INTERSECTION OPERATION

THE INTERSECTION OPERATION WILL REMAIN THE SAME.

TYPICAL MESSAGES FOR ACCESSIBLE PED SIGNALS

TYPICAL INTERSECTION, STREETS AT 90 DEGREES

WAIT: "WAIT TO CROSS VIETNAM VETERANS MEMORIAL HIGHWAY AT BOULTON STREET" *

WALK: RAPID TICK

WALK: "WALK SIGN ON TO CROSS MASSACHUSETTS AVENUE"

* MESSAGE USED IF DISTANCE FROM NEAREST PUSHBUTTON FOR PERPIDICULAR CROSSING IS < 10'
** MESSAGE USED IF CROSSWALK DIVERGES FROM OR CONVERGES WITH PARALLEL TRAFFIC

NOTE: MESSAGES FOR INTERSECTION CONFIGURATIONS, VARYING FROM THE ABOVE ARE TO BE APPROVED BY THE DIRECTOR, OFFICE OF TRAFFIC AND SAFETY.

CONTROLLER REQUIREMENTS

THE EXISTING CABINET AND CONTROLLER SHALL BE USED.

MAINTENANCE OF TRAFFIC

THE FOLLOWING TRAFFIC CONTROL STANDARDS SHALL BE REFERENCED FOR THE PROJECT. ADDITIONAL TRAFFIC CONTROL STANDARDS MAYBE USED AS DIRECTED BY THE ENGINEER.

STANDARD NO. MD-104.04-01 (SHOULDER WORK)

STANDARD NO. MD-104.04-05 (RIGHT LANE CLOSURE)

PROJECT CONTACTS

THE CONTACT PERSONS FOR SHA ARE AS FOLLOWS:

MS. ERIN KUHN
ASSISTANT DISTRICT ENGINEER - TRAFFIC
PHONE: (410) 321-2781/2785

MR. ANDRE FUTRELL
ASSISTANT DISTRICT ENGINEER - MAINTENANCE
PHONE: (410) 321-2761

MR. MIKE PASQUARIELLO
ASST. DISTRICT UTILITY ENGINEER
PHONE: (410) 321-2841

MR. RICHARD L. DAFF, SR.
CHIEF, TRAFFIC OPERATIONS DIVISION
PHONE: (410) 787-7630

WIRING KEY

A, B, C, D — 5-CONDUCTOR ELECTRICAL CABLE (NO. 14 A.W.G.)

E, F, G, H — 2-CONDUCTOR ELECTRICAL CABLE (NO. 14 A.W.G.)

J — STRANDED BARE COPPER GROUND WIRE (NO. 6 A.W.G.)

+ - 3/4 IN. X 10 FT. GROUND ROD

WIRING DIAGRAM

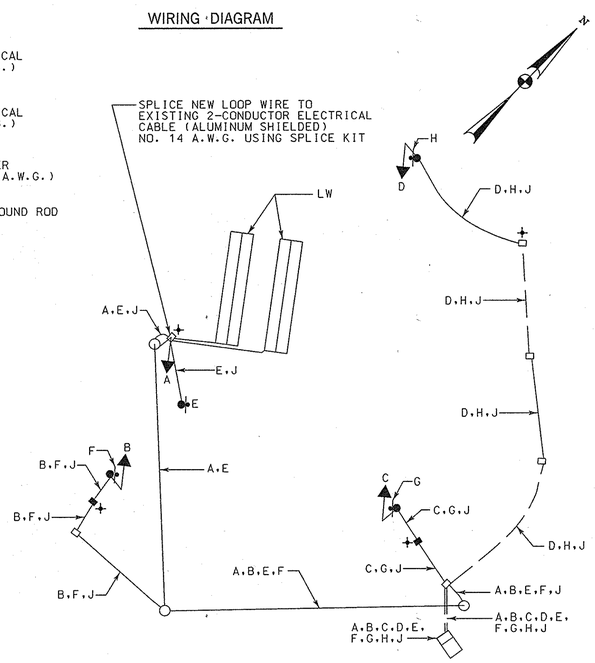

EQUIPMENT LIST "A"

A. EQUIPMENT TO BE SUPPLIED BY THE SHA

ITEM NO.	QUANTITY	DESCRIPTION
9571	22 S.F.	SHEET ALUMINUM SIGNS TO CONSIST OF :
		- 4 EACH R10-3(1) SIGN (9 IN. x 15 IN.) TO READ "PUSHBUTTON TO CROSS VEITNAM VET. MEM. HIGHWAY"
		- 2 EACH W11-2 (FY) (30" x 30") SIGN - GROUND MOUNT
		- 2 EACH W16-7p (FY) (24" x 12") SIGN - GROUND MOUNT

EQUIPMENT LIST "C"

ALL REMOVED EQUIPMENT SHALL BECOME THE PROPERTY OF THE CONTRACTOR

PHASE CHART

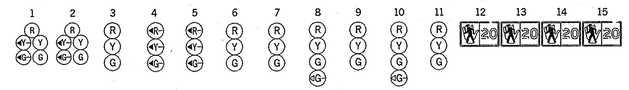

	1	2	3	4	5	6	7	8	9	10	11	12	13	14	15
PHASE 1 + 5	R, G	R, G	R	G	G	R	R	R	R	R	R	DW	DW	DW	DW
1 + 5 CHANGE	PHASE 1 + 5 MAY CHANGE TO PHASE 1 + 6, PHASE 2 + 5 OR PHASE 2 + 6														
PHASE 1 + 6	R	R	R	G	G	G	G	R	R	R	R	DW	DW	DW	DW
1 + 6 CHANGE	R	R	R	Y	Y	G	G	R	R	R	R	DW	DW	DW	DW
PHASE 2 + 5	G, G	G, G	G	R	R	R	R	R	R	R	R	DW	DW	DW	DW
2 + 5 CHANGE	G, Y	G, Y	G	R	R	R	R	R	R	R	R	DW	DW	DW	DW
PHASE 2 + 6	G	G	G	R	R	G	G	R	R	R	R	DW	DW	DW	DW
2 + 6 CHANGE	Y	Y	Y	R	R	Y	Y	R	R	R	R	DW	DW	DW	DW
PHASE 3	R	R	R	R	R	R	R	R	R	G, G	G	DW	DW	DW	DW
3 CHANGE	R	R	R	R	R	R	R	R	R	Y	Y	DW	DW	DW	DW
PHASE 3 ALT	R	R	R	R	R	R	R	R	R	G, G	G	W	DW	DW	W
PED CLEARANCE	R	R	R	R	R	R	R	R	R	G, G	G	FL/DW	DW	DW	FL/DW
3 ALT CHANGE	R	R	R	R	R	R	R	R	R	Y	Y	DW	DW	DW	DW
PHASE 4	R	R	R	R	R	R	R	G, G	G	R	R	DW	DW	DW	DW
4 CHANGE	R	R	R	R	R	R	R	Y	Y	R	R	DW	DW	DW	DW
PHASE 4 ALT	R	R	R	R	R	R	R	G, G	G	R	R	DW	W	W	DW
PED CLEARANCE	R	R	R	R	R	R	R	G, G	G	R	R	DW	FL/DW	FL/DW	DW
4 ALT CHANGE	R	R	R	R	R	R	R	Y	Y	R	R	DW	DW	DW	DW
FLASHING OPERATION	FL/Y	FL/Y	FL/Y	FL/R	FL/R	FL/Y	FL/Y	FL/R	FL/R	FL/R	FL/R	DARK	DARK	DARK	DARK

MODIFIED PEDESTAL POLE FOUNDATION

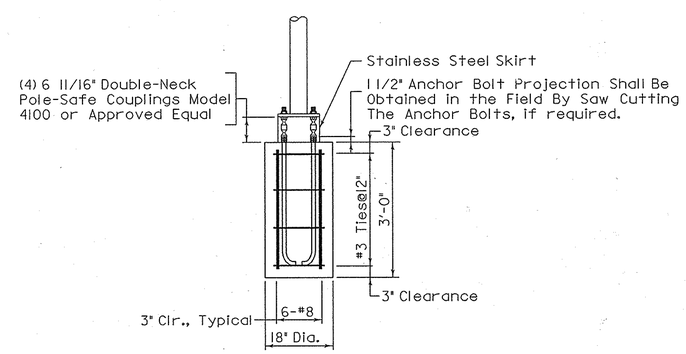

EQUIPMENT LIST "B"

B. EQUIPMENT TO BE FURNISHED AND/OR INSTALLED BY THE CONTRACTOR

ITEM NO.	QUANTITY	DESCRIPTION
1001	1 EACH	MAINTENANCE OF TRAFFIC
2001	9 C.Y.	CLASS 2 EXCAVATION
2002	4 C.Y.	TEST PIT EXCAVATION
5003	930 L.F.	12 INCH WHITE LEAD FREE PERMANENT THERMOPLASTIC PAVEMENT MARKINGS
5004	25 L.F.	24 INCH WHITE LEAD FREE REFLECTIVE THERMOPLASTIC PAVEMENT MARKINGS
5005	750 L.F.	REMOVAL OF EXISTING PERMANENT PAVEMENT LINE MARKINGS - ANY WIDTH
5006	1 EACH	REMOVAL OF EXISTING PERMANENT PAVEMENT MARKING LETTERS, SYMBOLS, ARROWS AND NUMBERS
6001	105 L.F.	DEPRESSED CURB AND GUTTER
6002	45 L.F..	STANDARD TYPE A COMBINATION CURB AND GUTTER 12 INCH GUTTER PAN 8 INCH DEPTH
6003	780 S.F.	4 INCH CONCRETE SIDEWALK
8006	1 EACH	2 WIRE CENTRAL CONTROL UNIT
8014	4 EACH	AUDIBLE/TACTILE PEDESTRIAN PUSHBUTTON STATION & SIGNS
8015	4 EACH	BREAKAWAY PEDESTAL POLE (ANY SIZE)
8024	4 EACH	LED 16 INCH COUNTDOWN PEDESTRIAN SIGNAL HEADS
8028	1 EACH	REM & DISPOSE MAT & EQUIP PER ASSIGN
8037	135 L.F.	DETECTABLE WARNING SURFACES
8040	4 C.Y.	CONCRETE FOR SIGNAL FOUNDATION
8041	36 L.F.	WOOD SIGN SUPPORTS 4 INCH X 4 INCH
8043	430 L.F.	NO. 6 AWG STRANDED BARE COPPER GROUND WIRE
8048	75 L.F.	4 INCH SCHEDULE 80 RIGID PVC CONDUIT - BORED
8049	75 L.F.	3 INCH SCHEDULE 80 RIGID PVC CONDUIT - TRENCHED
8054	15 L.F.	1 INCH LIQUID TIGHT FLEXIBLE NON-METALLIC CONDUIT FOR DETECTOR SLEEVE
8062	2 EACH	FURNISH AND INSTALL ELECTRICAL HANDHOLE
8063	18 S.F.	INSTALL GROUND MOUNTED SIGN
8064	4 S.F.	INSTALL OVERHEAD SIGN
8070	4 EACH	GROUND ROD - 3/4 INCH DIAMETER X 10 FOOT LENGTH
8074	1 EACH	CUT, CLEAN, GALVANIZE AND CAP TRAFFIC SIGNAL STRUCTURE
8076	1195 L.F.	ELECTRICAL CABLE - 2 CONDUCTOR (NO. 14 AWG)
8078	1215 L.F.	ELECTRICAL CABLE - 5 CONDUCTOR (NO. 14 AWG)
8080	850 L.F.	LOOP WIRE ENCASED IN FLEXIBLE TUBING (NO. 14 AWG)
8081	240 L.F.	SAW CUT FOR SIGNAL (LOOP DETECTOR)

TOD NO:AT782-82
SHA NO:HA457A54/B54
MD24@BOULTON STREET

STATE OF MARYLAND
DEPARTMENT OF TRANSPORTATION
STATE HIGHWAY ADMINISTRATION
OFFICE OF TRAFFIC & SAFETY
TRAFFIC ENGINEERING DESIGN DIVISION

MD 24 (VIETNAM VETERANS MEMORIAL HIGHWAY)
AND BOULTON STREET

Whitman, Requardt and Associates, LLP
801 South Caroline Street
Baltimore, Maryland 21231
(410) 235-3450

GENERAL INFORMATION SHEET

SCALE NONE	DATE 1/1/2008	CONTRACT NO. AT7825185	
DESIGNED BY B. DONOWAY		COUNTY HARFORD	
DRAWN BY B. DONOWAY		LOGMILE 12.00 24.09 33	
CHECKED BY N. LEARY		TIMS NO. 1366	
FAP NO. SEE TITLE SHEET		TOD NO.	
TS NO. 238c	DRAWING TSP - 2 OF 2	SHEET NO. 2 OF 2	

PLOTTED: 01-14-2008
FILE: n:\31556-132\cadd\pSG-N002_1366.dgn

BY: sbloss