FINGERBOARD ROAD IS ASSUMED TO RUN IN AN EAST-WEST DIRECTION

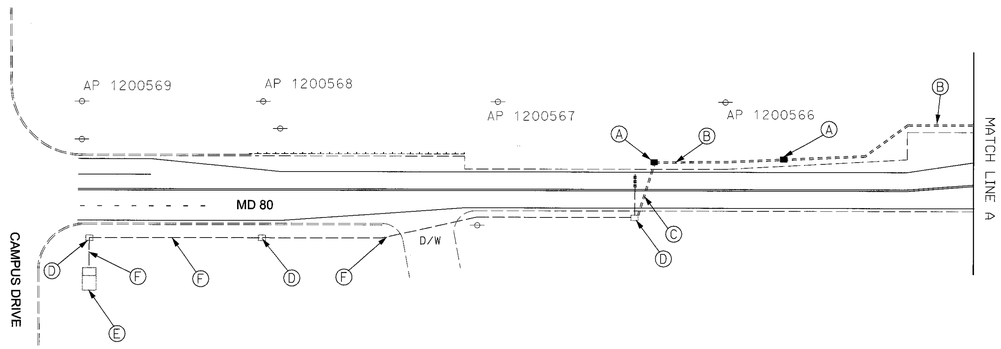

EQUIPMENT LISTS

B. EQUIPMENT TO BE FURNISHED AND/OR INSTALLED BY THE CONTRACTOR.

ITEM	QUANTITY	DESCRIPTION
8037	40 LF	F&I 3" SCHEDULE 80 RIGID PVC CONDUIT - BORED
8040	700 LF	F&I 3" SCHEDULE 80 RIGID PVC CONDUIT - TRENCHED
8054	4 EA	F&I ELECTRICAL HANDHOLE
8070	1700 LF	F&I 12-PAIR COMMUNICATION CABLE, JELLYFILLED (UNDERGROUND)

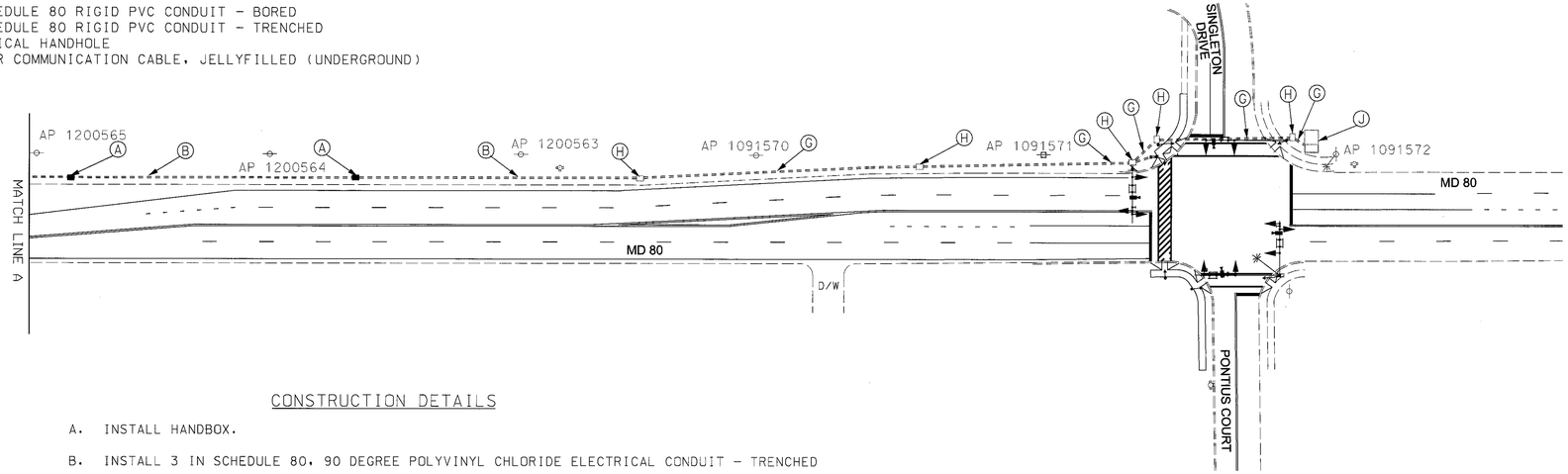

CONSTRUCTION DETAILS

A. INSTALL HANDBOX.

B. INSTALL 3 IN SCHEDULE 80, 90 DEGREE POLYVINYL CHLORIDE ELECTRICAL CONDUIT - TRENCHED

C. INSTALL 3 IN SCHEDULE 80, 90 DEGREE POLYVINYL CHLORIDE ELECTRICAL CONDUIT - BORED

D. USE EXISTING HANDBOX.

E. USE EXISTING CABINET.

F. USE EXISTING CONDUIT.

G. CONDUIT FOR PROPOSED MD 80 & SINGLETON DRIVE/ PONTIUS COURT TRAFFIC SIGNAL.

H. HANDBOX FOR PROPOSED MD 80 & SINGLETON DRIVE/ PONTIUS COURT TRAFFIC SIGNAL.

J. CABINET FOR PROPOSED MD 80 & SINGLETON DRIVE/ PONTIUS COURT TRAFFIC SIGNAL.

BW669M83

BAI BRUDIS & ASSOCIATES, INC.
CONSULTING ENGINEERS
9220 RUMSEY ROAD; SUITE 110
COLUMBIA, MARYLAND 21045
(410)-884-3607

BY: $USERNAME$

APPROVALS	REVISIONS
Amy K. Beall 3-8-05 TEAM LEADER	
3/8/05 ASST. DIV. CHIEF	
3/9/05 DIVISION CHIEF	
3/9/05 OFFICE DIRECTOR	

SURVEY BOOK NO.

PLOTTED: $DATE$
FILE: $FILE$

STATE OF MARYLAND
DEPARTMENT OF TRANSPORTATION
STATE HIGHWAY ADMINISTRATION
TRAFFIC ENGINEERING DESIGN DIVISION
OFFICE OF TRAFFIC & SAFETY

MD 80 (FINGERBOARD ROAD) FROM SINGLETON DRIVE TO CAMPUS DRIVE

INTERCONNECT PLAN

IC-01

SCALE 1" = 50' DATE 2/25/05 CONTRACT NO.

DESIGNED BY KMM
DRAWN BY KMM
CHECKED BY CJP
COUNTY FREDERICK

TS NO. 4383
T.I.M.S. NO. G795
F.A.P. NO.
LOGMILE 10008006.23

DRAWING NO. 3 OF 3

SHEET NO. 3 OF 3

INDEXED