PROJECT DESCRIPTION

I. GENERAL:

THIS PROJECT INVOLVES THE INSTALLATION OF A TRAFFIC CONTROL SIGNAL AT THE INTERSECTION OF MD 276 AND BARNES CORNER ROAD / LIBERTY GROVE ROAD IN CECIL COUNTY. STREET LIGHTING AND SHIELD ASSEMBLY SIGNS SHALL BE PROVIDED.

MD 276 IS CONSIDERED TO RUN IN A NORTH-SOUTH DIRECTION.

II. INTERSECTION OPERATION:

THE INTERSECTION WILL OPERATE IN A FOUR-PHASE, FULL-ACTUATED MODE. VIDEO DETECTOR CAMERAS SHALL PROVIDE PRESENCE DETECTION AND PROBES SHALL PROVIDE THE ADVANCE DETECTION.

MD 276 APPROACHES SHALL OPERATE CONCURRENTLY. BARNES CORNER ROAD AND LIBERTY GROVE ROAD APPROACHES SHALL OPERATE CONCURRENTLY.

UPON COMPLETION OF THE PROJECT THE CONTRACTOR SHALL NOTIFY MR. ROBERT SNYDER OF SHA AT (410) 787-7635 TO ARRANGE FOR THE PHONE LINE INSTALLATION. THE CONTRACTOR IS TO PROVIDE MR. SNYDER WITH THE NEAREST STREET ADDRESS, ZIP CODE AND PHONE NUMBER.

EQUIPMENT LIST "A"

ITEM A. EQUIPMENT TO BE SUPPLIED BY THE ADMINISTRATION.

9042	1 EA	NEMA EIGHT PHASE, FULL-TRAFFIC-ACTUATED CONTROLLER
9044	1 EA	WITH VIDEO DETECTOR UNIT, AND 1- FOUR CHANNEL RACK MOUNTED AMPLIFIER AND ALL NECESSARY EQUIPMENT.

FLAT SHEET ALUMINUM SIGNS CONSISTING OF:

	2 EA	D-3(1) (VAR. X 16") DUAL FACE MAST ARM MOUNT (JACOB TOME MEMORIAL HWY)
9570 108 SF	1 EA	D-3(1) (VAR. X 16") DUAL FACE MAST ARM MOUNT (BARNES CORNER RD)
	1 EA	D-3(1) (VAR. X 16") DUAL FACE MAST ARM MOUNT (LIBERTY GROVE RD)
9571 102 SF	1 EA	SHIELD ASSEMBLY (30" X 51") POLE MOUNT
	1 EA	SHIELD ASSEMBLY (30" X 51") GROUND POST MOUNT
	1 EA	SHIELD ASSEMBLY (48" X 75") POLE MOUNT
	1 EA	SHIELD ASSEMBLY (48" X 75") GROUND POST MOUNT
	4 EA	W3-3 (36" X 36") GROUND POST MOUNT
	2 EA	D-3(3) (72" X 36") GROUND POST MOUNT

PROJECT CONTACTS

THE CONTACT PERSONS FOR SHA ARE AS FOLLOWS:

MR. ROBERT KEIL
ASSISTANT DISTRICT ENGINEER-TRAFFIC
PHONE: 410-810-3210

MR. NORRIS KIMBERT
ASSISTANT DISTRICT ENGINEER-CONSTRUCTION
PHONE: 410-810-3270

MR. TERRY WRIGHT
ASSISTANT DISTRICT ENGINEER-MAINTENANCE
PHONE: 410-810-3250

MR. BARRY CLOTHIER
DISTRICT UTILITY ENGINEER
PHONE: 410-810-3275

THE CONTACT PERSONS FOR OFFICE OF TRAFFIC AND SAFETY:

MR. ED RODENHIZER
CHIEF, SIGNAL OPERATION SECTION
PHONE: 410-787-7652

MR. ROBERT SNYDER
ASST. CHIEF, TRAFFIC OPERATION DIVISION
410-787-7631

MR. STEVE HOLLIE
PROJECT MANAGER, TRAFFIC ENGINEERING DESIGN DIVISION
410-787-4088

CENTURY ENGINEERING
CONSULTING ENGINEERS - PLANNERS
32 WEST ROAD
TOWSON, MD 21204

T3 design
T3 DESIGN, P.C.
3927 OLD LEE HWY
SUITE 101-C
FAIRFAX, VA 22030
PHONE: 703-359-5661
www.t3design.us

BY: amym

EQUIPMENT LIST "B"

B. EQUIPMENT TO BE FURNISHED AND/OR INSTALLED BY THE CONTRACTOR.

ITEM	QUANTITY		DESCRIPTION
1001	3	EA	MAINTENANCE OF TRAFFIC
2002	4	CY	TEST PIT EXCAVATION
5002	170	LF	REMOVAL OF EX PERM PVMT LINE MARKINGS-ANY WIDTH
5005	120	LF	24" HEAT APPLIED WHITE PERM PREFORMED THERMOPLASTIC PVMT MARKINGS
8001	24	EA	12" LED SIGNAL HEAD SECTION (R,Y,G)
8007	2	EA	ANY SIZE LIGHTING ARM ON SIGNAL POLE WITH 250 WATT HPS LAMPS & LUMINAIRE
8019	2	EA	STEEL POLE WITH SINGLE 50 FT MAST ARM
8021	2	EA	NONINVASIVE DETECTOR WITH 1000 FT. LEAD-IN CABLE
8024	1	EA	TWIN MAST ARM POLE & 50 FT./70 FT. MAST ARMS ANY 'T' DIMENSION
8026	2	EA	VIDEO DETECTION CAMERA & CABLE UP TO 500 FT.
8034	110	LF	SCHEDULE 80 RIGID PVC CONDUIT UP TO 4"-TRENCHED
8035	910	LF	SCHEDULE 80 RIGID PVC CONDUIT UP TO 4"-BORED
8036	134	LF	WOOD SIGNS SUPPORT UP TO 4 x 6
8038	210	SF	INSTALL OVERHEAD OR GROUND MOUNTED SIGN (INCLUDING ALL HARDWARE)
8040	300	LF	NO. 6 AWG STRANDED BARE COPPER GROUND WIRE
8042	1	EA	METERED SERVICE PEDESTAL EMBEDDED
8044	100	LF	ELECTRICAL CABLE 1-CONDUCTOR NO. 4 AWG-THHN/THWN
8046	12	EA	FURNISH AND INSTALL ELECTRICAL HANDHOLE
8055	100	LF	ELECTRICAL CABLE - 5 CONDUCTOR (NO. 14 AWG)
8056	700	LF	ELECTRICAL CABLE - 7 CONDUCTOR (NO. 14 AWG)
8057	350	LF	ELECTRICAL CABLE - 2 CONDUCTOR (NO. 12 TRAY CABLE)
8064	1	EA	INSTALL CONTROLLER AND CABINET - BASE MOUNT

DIMENSION DIAGRAM

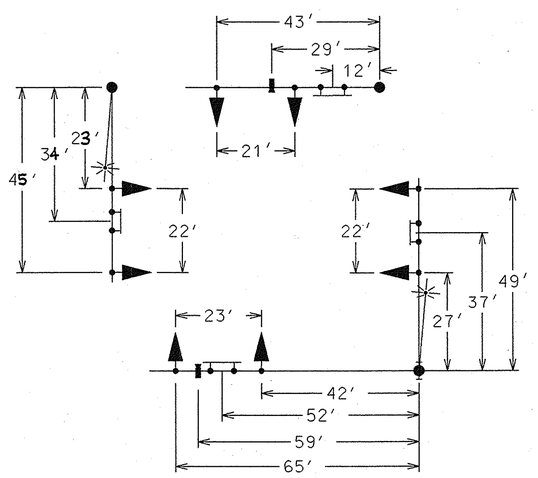

PHASE CHART

	1	2	3	4	5	6	7	8
	R	R	R	R	R	R	R	R
	Y	Y	Y	Y	Y	Y	Y	Y
	G	G	G	G	G	G	G	G
PHASE 2 & 6	G	G	G	G	R	R	R	R
2 & 6 CHANGE	Y	Y	Y	Y	R	R	R	R
PHASE 4 & 8	R	R	R	R	G	G	G	G
4 & 8 CHANGE	R	R	R	R	Y	Y	Y	Y
FLASHING OPERATION	FL/Y	FL/Y	FL/Y	FL/Y	FL/R	FL/R	FL/R	FL/R

WIRING DIAGRAM

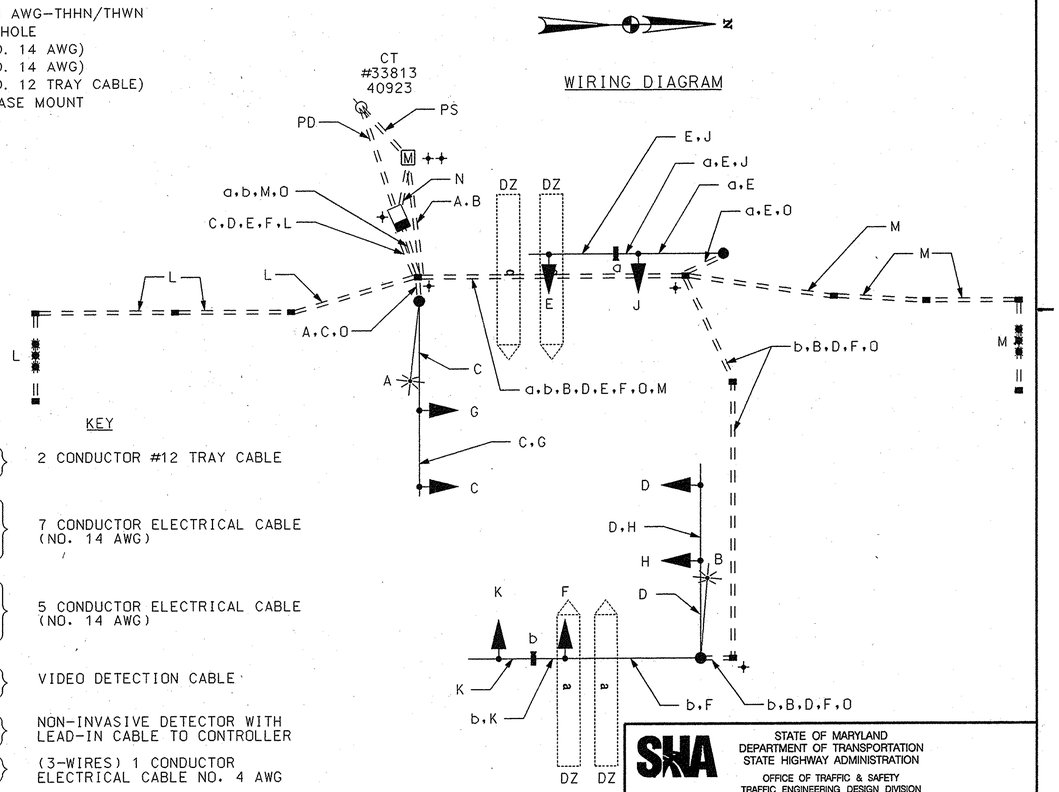

KEY

A, B	2 CONDUCTOR #12 TRAY CABLE
C, D, E, F	7 CONDUCTOR ELECTRICAL CABLE (NO. 14 AWG)
G, H, J, K	5 CONDUCTOR ELECTRICAL CABLE (NO. 14 AWG)
a, b	VIDEO DETECTION CABLE
L, M	NON-INVASIVE DETECTOR WITH LEAD-IN CABLE TO CONTROLLER
N	(3-WIRES) 1 CONDUCTOR ELECTRICAL CABLE NO. 4 AWG
O	NO. 6 AWG STRANDED BARE COPPER GROUND WIRE
PS	PROPOSED UNDERGROUND SERVICE FEED
PD	PROPOSED UNDERGROUND PHONE DROP
+	3/4" DIA. X 10' LENGTH GROUND ROD
M	METERED SERVICE PEDESTAL
DZ	CAMERA DETECTOR ZONE

TOD No.: AT909-08M
SHA No.: CE66A51/B51/M51
MD 276 @ Barnes Corner Rd/Liberty Grove Road

SHA
STATE OF MARYLAND
DEPARTMENT OF TRANSPORTATION
STATE HIGHWAY ADMINISTRATION
OFFICE OF TRAFFIC & SAFETY
TRAFFIC ENGINEERING DESIGN DIVISION

MD 276 (JACOB TOME MEMORIAL HWY) AND
BARNES CORNER RD /LIBERTY GROVE RD

GENERAL INFORMATION SHEET

SCALE 1" = 20' DATE 8/22/2006 CONTRACT NO. AT9095165

DESIGNED BY AJM
DRAWN BY JRL
CHECKED BY PAT
F.A.P. NO.
COUNTY CECIL
LOGMILE 07027605.82
T.I.M.S. NO. H383
TOD NO.

TS NO. TS-4509-GI
DRAWING NO. 2 OF 2

PLOTTED: Tuesday, August 22, 2006 AT 03:58 PM
FILE: Z:\Project\1272-1002 Century Engineering-MD SHA\Task 2 MD 276\CADD\pSG-P001_md276.dgn