PROJECT DESCRIPTION

GENERAL

THIS PROJECT INVOLVES THE RECONSTRUCTION OF THE EXISTING TRAFFIC CONTROL SIGNAL AT THE INTERSECTION OF U.S. I ALT. (WASHINGTON BOULEVARD) AND CATON AVENUE\HAMMONDS FERRY ROAD IN BALTIMORE COUNTY, MARYLAND. U.S. I ALT. IS ASSUMED TO RUN IN AN EAST-WEST DIRECTION.

INTERSECTION OPERATION

THE INTERSECTION WILL OPERATE IN A NEMA SIX PHASE, SEMI-TRAFFIC-ACTUATED MODE WITH THE U.S. 1 ALT. APPROACHES OPERATING CONCURRENTLY AND THE CATON AVENUE/HAMMONDS FERRY ROAD APPROACHES OPERATING CONCURRENTLY

APS NOTES

APS WILL FUNCTION AS FOLLOWS:

1. WASHINGTON BLVD.
   - A. WHEN PEDESTRIAN LOCATES AND PRESSES PUSHBUTTON FOR AN EXTENDED TIME, THE MESSAGE WILL BE "WAIT TO WASHINGTON BLVD".
   - B. WHEN WALK PHASE BEGINS, THE MESSAGE WILL BE A RAPID TICK WHICH WILL LAST FOR THE DURATION OF THE WALK PHASE.
2. HAMMONDS FERRY ROAD
   - A. WHEN PEDESTRIAN LOCATES AND PRESSES PUSHBUTTON FOR AN EXTENDED TIME, THE MESSAGE WILL BE "WAIT TO CROSS HAMMONDS FERRY ROAD".
   - B. WHEN WALK PHASE BEGINS, THE MESSAGE WILL BE A RAPID TICK WHICH WILL LAST FOR THE DURATION OF THE WALK PHASE.

CONTROLLER REQUIREMENTS

INSTALL A FULL-TRAFFIC-ACTUATED, EIGHT-PHASE CONTROLLER WITH INTERSECTION MONITOR WITH BATTERY BACKUP FOR PHONE DROP AND ASSOCIATED HARNESSES HOUSED IN A NEMA SIZE "6" BASE MOUNTED CABINET.

PHONE DROP

UPON COMPLETION OF THIS PROJECT, THE CONTRACTOR SHALL NOTIFY MR. ROBERT SNYDER OF SHA AT (410) 787-7635 TO ARRANGE FOR THE PHONE LINE INSTALLATION. THE CONTRACTOR IS TO PROVIDE MR. SNYDER THE NEAREST STREET ADDRESS, ZIP CODE, AND PHONE NUMBER.

MAINTENANCE OF TRAFFIC

THE FOLLOWING MINUMUM TRAFFIC CONTROL STANDARDS SHALL BE REFERENCED FOR THE PROJECT.

STANDARD NO. MD-104.04-03 (LEFT LANE CLOSURE)

STANDARD NO. MD-104.04-05 (RIGHT LANE CLOSURE)

PROJECT CONTACTS

THE CONTACT PERSONS FOR SHA ARE AS FOLLOWS:

MR. RANDALL SCOTT
ASSISTANT DISTRICT ENGINEER - TRAFFIC
PHONE: (410) 321-2781/2785

MR. STEVE MARCISZEWSKI
ASSISTANT DISTRICT ENGINEER - MAINTENANCE
PHONE: (410) 321-2761

MR. MIKE PASQUARIELLO
ASST. DISTRICT UTILITY ENGINEER
PHONE: (410) 321-2841

MR. RICHARD L. DAFF, SR.
CHIEF, TRAFFIC OPERATIONS DIVISION
PHONE: (410) 787-7630

WIRING DIAGRAM

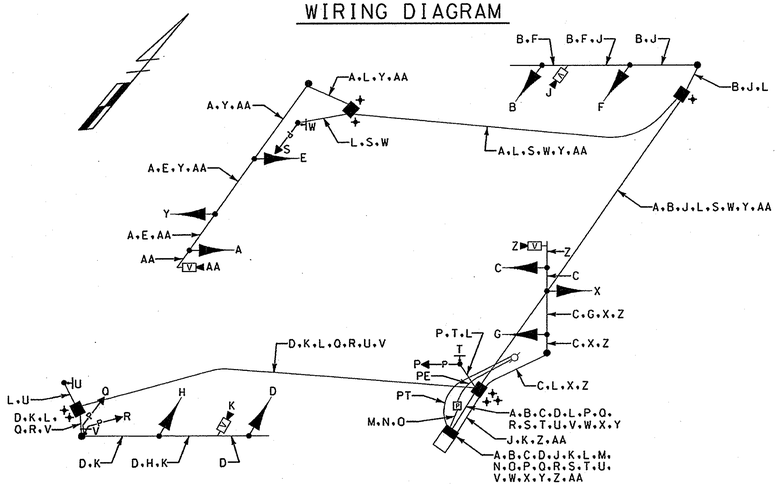

WIRING KEY

- A, B, C, D, X, Y — 7-CONDUCTOR ELECTRICAL CABLE (NO. 14 A.W.G.)
- E, F, G, H — P, Q, R, S — 5-CONDUCTOR ELECTRICAL CABLE (NO. 14 A.W.G.)
- T, U, V, W — 2-CONDUCTOR ELECTRICAL CABLE (NO. 14 A.W.G.)
- J, K, Z, AA — VIDEO CAMERA DETECTION LEAD-IN CABLE
- L — STRANDED BARE COPPER GROUND WIRE (NO. 6 A.W.G.)
- M, N, O — 1-CONDUCTOR ELECTRICAL CABLE (NO. 4 A.W.G.)
- PE - PROPOSED UNDERGROUND ELECTRICAL SERVICE
- PT - PROPOSED UNDERGROUND TELEPHONE SERVICE
- + - 3/4 IN. X 10 FT. GROUND ROD

EQUIPMENT LIST "A"

A. EQUIPMENT TO BE SUPPLIED BY THE SHA

ITEM NO.	QUANTITY	DESCRIPTION
9044	1 EACH	EIGHT-PHASE, FULL-TRAFFIC-ACTUATED CONTROLLER WITH INTERSECTION MONITOR HOUSED IN A NEMA SIZE "6" BASE MOUNTED CABINET
9086	1 EACH	VIDEO INTERFACE EQUIPMENT: 1-4 CAMERAS
9571	62 S.F.	SHEET ALUMINUM SIGNS TO CONSIST OF :
	- 2 EACH	D-3(1) SIGN (VARIABLE x 16 IN.) DUAL FACED - MAST ARM MOUNT
	- 2 EACH	D-3(1) SIGN (VARIABLE x 16 IN.) DUAL FACED - MAST ARM MOUNT
	- 1 EACH	R10-11b SIGN (24 x 24 IN.) - MAST ARM MOUNT
	- 1 EACH	"7AM-7PM" SIGN (24 x 8 IN.) - MAST ARM MOUNT
	- 2 EACH	R4-7(2) SIGN (18 IN. x 30 IN.) - GROUND MOUNT
	- 2 EACH	R10-3(1) SIGN (9 IN. x 15 IN.) TO READ "PUSHBUTTON TO CROSS WASHINGTON BLVD"
	- 2 EACH	R10-3(1) SIGN (9 IN. x 15 IN.) TO READ "PUSHBUTTON TO CROSS HAMMONDS FERRY RD"

PHASE CHART

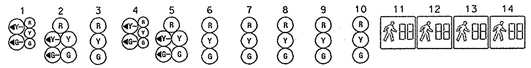

	1	2	3	4	5	6	7	8	9	10	11	12	13	14
PHASE 1 + 5	R G	R G	R	R G	R G	R	R	R	R	R	DW	DW	DW	DW
1 + 5 CHANGE	PHASE 1 + 5 MAY CHANGE TO PHASE 1 + 6, PHASE 2 + 5 OR PHASE 2 + 6													
PHASE 1 + 6	G G	G G	G	R	R	R	R	R	R	R	DW	DW	DW	DW
1 + 6 CHANGE	G Y	G Y	G	R	R	R	R	R	R	R	DW	DW	DW	DW
PHASE 2 + 5	R	R	R	G G	G G	G	R	R	R	R	DW	DW	DW	DW
2 + 5 CHANGE	R	R	R	G Y	G Y	G	R	R	R	R	DW	DW	DW	DW
PHASE 2 + 6	G	G	G	G	G	G	R	R	R	R	DW	DW	DW	DW
2 + 6 CHANGE	Y	Y	Y	Y	Y	Y	R	R	R	R	DW	DW	DW	DW
PHASE 2 + 6 ALT	G	G	G	G	G	G	R	R	R	R	WK	WK	DW	DW
PED CLEARANCE	G	G	G	G	G	G	R	R	R	R	FL/DW	FL/DW	DW	DW
2 + 6 ALT CHANGE	Y	Y	Y	Y	Y	Y	R	R	R	R	DW	DW	DW	DW
PHASE 4 + 8	R	R	R	R	R	R	G	G	G	G	DW	DW	DW	DW
4 + 8 CHANGE	R	R	R	R	R	R	Y	Y	Y	Y	DW	DW	DW	DW
PHASE 4 + 8 ALT	R	R	R	R	R	R	G	G	G	G	DW	DW	WK	WK
PED CLEARANCE	R	R	R	R	R	R	G	G	G	G	DW	DW	FL/DW	FL/DW
4 + 8 ALT CHANGE	R	R	R	R	R	R	Y	Y	Y	Y	DW	DW	DW	DW
FLASHING OPERATION	FL/Y	FL/Y	FL/Y	FL/Y	FL/Y	FL/Y	FL/R	FL/R	FL/R	FL/R	DARK	DARK	DARK	DARK

DIMENSION DIAGRAM

SCALE: 1"= 20'

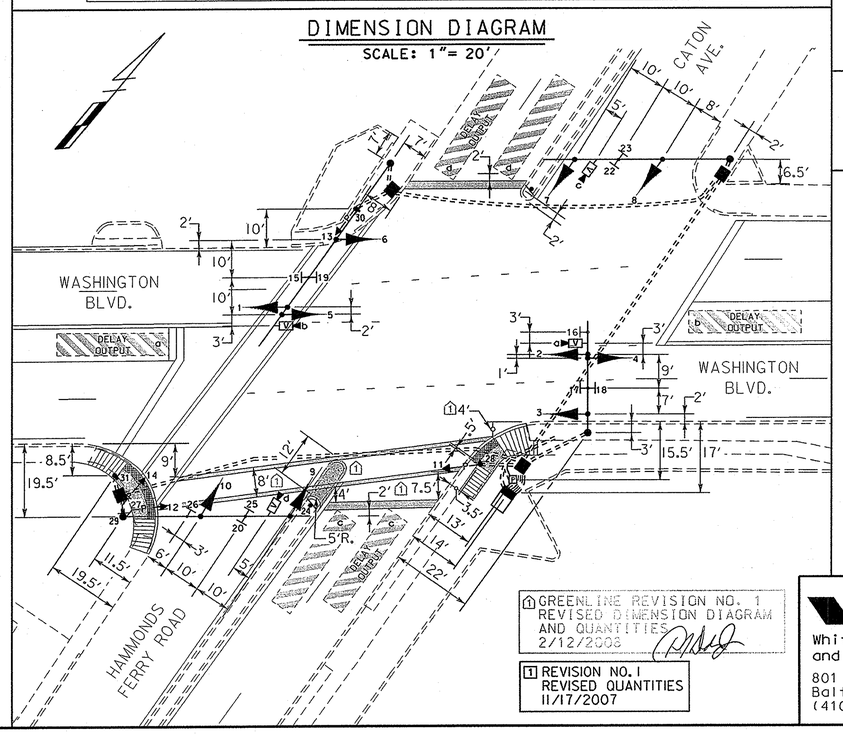

1 GREENLINE REVISION NO. 1
REVISED DIMENSION DIAGRAM
AND QUANTITIES
2/12/2008

1 REVISION NO. 1
REVISED QUANTITIES
11/17/2007

EQUIPMENT LIST "B"

B. EQUIPMENT TO BE FURNISHED AND/OR INSTALLED BY THE CONTRACTOR

ITEM NO.	QUANTITY	DESCRIPTION
1001	1 EACH	MAINTENANCE OF TRAFFIC
2001	1 15 ~~10~~ C.Y.	CLASS 2 EXCAVATION
2002	8 C.Y.	TEST PIT EXCAVATION
5002	15 L.F.	REMOVAL OF EXISTING PERMANENT PAVEMENT LINE MARKINGS - ANY WIDTH
5004	180 L.F.	12 INCH HEAT APPLIED WHITE PERMANENT PREFORMED THERMOPLASTIC PAVEMENT MARKINGS
5005	130 L.F.	24 INCH HEAT APPLIED WHITE PERMANENT PREFORMED THERMOPLASTIC PAVEMENT MARKINGS
1 6001	10 L.F.	STANDARD TYPE A COMBINATION CURB AND GUTTER 12 INCH GUTTER PAN 8 INCH DEPTH
6002	1 535 ~~625~~ S.F.	4 INCH CONCRETE SIDEWALK
8001	38 EACH	12 IN. LED SIGNAL HEAD SECTION
8002	1 EACH	2-WIRE CENTRAL CONTROL UNIT
8004	6 EACH	8 IN. LED SIGNAL HEAD SECTION
8008	4 EACH	AUDIBLE/TACTILE PEDESTRIAN PUSHBUTTON STATION & SIGNS
8009	3 EACH	BREAKAWAY PEDESTAL POLE (ANY SIZE)
8014	4 EACH	LED 16 INCH COUNTDOWN PEDESTRIAN SIGNAL HEADS
8016	1 EACH	MAST ARM POLE & 38 FT MAST ARM ANY 'T' DIMENSION
8017	1 EACH	MAST ARM POLE & 60 FT MAST ARM ANY 'T' DIMENSION
1 8019	2 ~~1~~ EACH	MAST ARM POLE & 50 FT MAST ARM ANY 'T' DIMENSION
8022	1 EACH	REMOVE AND DISPOSE OF EXISTING MATERIAL AND EQUIPMENT AS PER ASSIGNMENT
8026	4 EACH	VIDEO DETECTION CAMERA & CABLE UP TO 500 FT
8033	250 L.F.	SCHEDULE 80 RIGID PVC CONDUIT UP TO 4 INCHES - SLOTTED
8034	205 L.F.	SCHEDULE 80 RIGID PVC CONDUIT UP TO 4 INCHES - TRENCHED
8036	30 L.F.	WOOD SIGN SUPPORTS 4 INCH x 6 INCH
1 8037	1 50 ~~75~~ S.F.	DETECTABLE WARNING SURFACES
8038	87 S.F.	INSTALL OVERHEAD OR GROUND MOUNTED SIGN (INCLUDING ALL HARDWARE)
8040	480 L.F.	NO. 6 A.W.G. STRANDED BARE COPPER GROUND WIRE
8042	1 EACH	METERED SERVICE PEDESTAL EMBEDDED
8044	55 L.F.	ELECTRICAL CABLE - 1 CONDUCTOR NO. 4 A.W.G - THHN/THWN
8046	4 EACH	FURNISH AND INSTALL ELECTRICAL HANDHOLE
8051	2 EACH	CUT, CLEAN, GALVANIZE AND CAP TRAFFIC SIGNAL STRUCTURE
8053	620 L.F.	ELECTRICAL CABLE - 2 CONDUCTOR (NO. 14 A.W.G)
8055	750 L.F.	ELECTRICAL CABLE - 5 CONDUCTOR (NO. 14 A.W.G)
8056	1280 L.F.	ELECTRICAL CABLE - 7 CONDUCTOR (NO. 14 A.W.G)
8064	1 EACH	INSTALL CONTROLLER AND CABINET - BASE MOUNT

EQUIPMENT LIST "C"

C. EQUIPMENT TO BE REMOVED AND RETURNED TO SHA

SHA FORCES SHALL REMOVE THE CONTROLLER AND ALL AUXILIARY EQUIPMENT FROM THE CONTROLLER CABINET. THE CABINET AND ALL OTHER MATERIALS TO BE REMOVED BY THE CONTRACTOR SHALL BECOME THE PROPERTY OF THE CONTRACTOR.

MODIFIED PEDESTAL POLE FOUNDATION

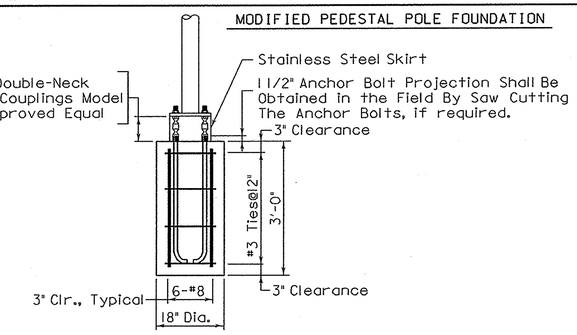

WR&A
Whitman, Requardt and Associates, LLP
801 South Caroline Street
Baltimore, Maryland 21231
(410) 235-3450

MARYLAND DOT - STATE HIGHWAY ADMINISTRATION
Office of Traffic & Safety
TRAFFIC ENGINEERING DESIGN DIVISION
GENERAL INFORMATION SHEET
U.S. 1 ALT. (WASHINGTON BLVD.) AND HAMMONDS FERRY RD./CATON AVE.

DRAWN BY: S. BLOSS	F.A.P. NO.		TS NO. 4587A	SHEET NO.
CHECKED BY: N. LEARY	S.H.A. NO.	AT9125185		
SCALE: NONE	COUNTY:	BALTIMORE	T.I.M.S. NO. ~~E954~~ G203	2 OF 2
DATE: 2/12/2008	LOG MILE:	0300IAL002.68		

m:\20008\usl&ham_ferry\GreenLine1_02.07.2008\g203gd02_GLI.dgn