PROJECT DESCRIPTION

GENERAL

THIS PROJECT INVOLVES THE MODIFICATION OF THE EXISTING TRAFFIC CONTROL SIGNAL AT THE INTERSECTION OF U.S. 1 (BELAIR ROAD) AND PUTTY HILL ROAD/RIDGE ROAD IN BALTIMORE COUNTY, MARYLAND. U.S. 1 IS ASSUMED TO RUN IN A NORTH-SOUTH DIRECTION.

INTERSECTION OPERATION

THE INTERSECTION WILL OPERATE IN A NEMA SIX-PHASE, FULL-TRAFFIC-ACTUATED MODE WITH THE U.S. 1 APPROACHES OPERATING CONCURRENTLY AND THE PUTTY HILL/RIDGE ROAD APPROACHES OPERATING CONCURRENTLY.

EXCLUSIVE/PERMISSIVE LEFT-TURN PHASING IS PROVIDED FOR NORTHBOUND AND SOUTHBOUND U.S. 1 APPROACHES.

AN ALTERNATE PEDESTRIAN PHASE IS PROVIDED ACROSS NORTH LEG OF U.S. 1.

AN ALTERNATE PEDESTRIAN PHASE WILL BE PROVIDED ACROSS SOUTH LEG OF U.S. 1.

CONTROLLER REQUIREMENTS

THE EXISTING BASE MOUNTED CABINET AND CONTROLLER WILL BE USED.

MAINTENANCE OF TRAFFIC

THE FOLLOWING TRAFFIC CONTROL STANDARDS SHALL BE REFERENCED FOR THE PROJECT. ADDITIONAL TRAFFIC CONTROL STANDARDS MAYBE USED AS DIRECTED BY THE ENGINEER.

STANDARD NO. MD-104.03-01 (SHOULDER WORK)

STANDARD NO. MD-104.03-03 (LEFT LANE CLOSURE)

STANDARD NO. MD-104.03-05 (RIGHT LANE CLOSURE)

PROJECT CONTACTS

THE CONTACT PERSONS FOR SHA ARE AS FOLLOWS:

MR. RANDALL SCOTT
ASSISTANT DISTRICT ENGINEER - TRAFFIC
PHONE: (410) 321-2781/2785

MR. STEVE MARCISZEWSKI
ASSISTANT DISTRICT ENGINEER - MAINTENANCE
PHONE: (410) 321-2761

MR. MIKE PASQUARIELLO
ASST. DISTRICT UTILITY ENGINEER
PHONE: (410) 321-2841

MR. RICHARD L. DAFF, SR.
CHIEF, TRAFFIC OPERATIONS DIVISION
PHONE: (410) 787-7630

WIRING DIAGRAM

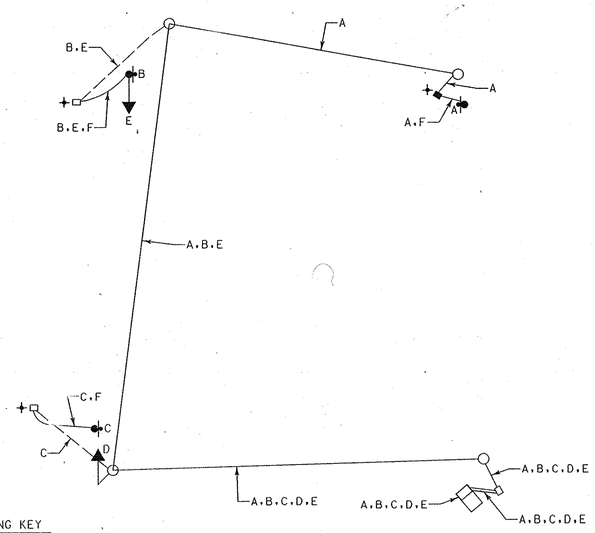

WIRING KEY

A, B, C } 2-CONDUCTOR ELECTRICAL CABLE (NO. 14 A.W.G.)

D, E } 5-CONDUCTOR ELECTRICAL CABLE (NO. 14 A.W.G.)

F } STRANDED BARE COPPER GROUND WIRE (NO. 6 A.W.G.)

⏚ - 3/4 IN. X 10 FT. GROUND ROD

EQUIPMENT LIST "A"

A. EQUIPMENT TO BE SUPPLIED BY THE SHA

ITEM NO.	QUANTITY	DESCRIPTION
9571	4 S.F.	SHEET ALUMINUM SIGNS TO CONSIST OF :
		- 4 EACH R10-3(1) SIGN (9 IN. x 15 IN.) TO READ "PUSHBUTTON TO CROSS BELAIR ROAD"

EQUIPMENT LIST "C"

C. EQUIPMENT TO BE REMOVED AND RETURNED TO SHA

ALL REMOVED SIGNAL MATERIALS SHALL BECOME PROPERTY OF THE CONTRACTOR

PHASE CHART

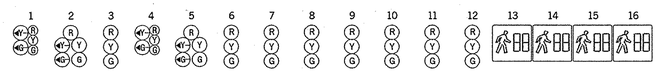

	1	2	3	4	5	6	7	8	9	10	11	12	13	14	15	16
PHASE 1 AND 5	R ←G—	R ←G—	R	R ←G—	R ←G—	R	R	R	R	R	R	R	DW	DW	DW	DW
1 AND 5 CHANGE	PHASE 1 + 5 MAY CHANGE TO PHASE 1 + 6, PHASE 2 + 5 OR PHASE 2 + 6															
PHASE 1 AND 6	G ←G—	G ←G—	G	R	R	R	R	R	R	R	R	R	DW	DW	DW	DW
1 AND 6 CHANGE	G ←Y—	G ←Y—	G	R	R	R	R	R	R	R	R	R	DW	DW	DW	DW
PHASE 2 AND 5	R	R	R	G ←G—	G ←G—	G	R	R	R	R	R	R	DW	DW	DW	DW
2 AND 5 CHANGE	R	R	R	G ←Y—	G ←Y—	G	R	R	R	R	R	R	DW	DW	DW	DW
PHASE 2 AND 6	G	G	G	G	G	G	R	R	R	R	R	R	DW	DW	DW	DW
2 AND 6 CHANGE	Y	Y	Y	Y	Y	Y	R	R	R	R	R	R	DW	DW	DW	DW
PHASE 4 AND 8	R	R	R	R	R	R	G	G	G	G	G	G	DW	DW	DW	DW
4 AND 8 CHANGE	R	R	R	R	R	R	Y	Y	Y	Y	Y	Y	DW	DW	DW	DW
PHASE 4 + 8 ALT	R	R	R	R	R	R	G	G	G	G	G	G	WK	WK	WK	WK
PED CLEARANCE	R	R	R	R	R	R	G	G	G	G	G	G	FL/DW	FL/DW	FL/DW	FL/DW
4 + 8 ALT CHANGE	R	R	R	R	R	R	Y	Y	Y	Y	Y	Y	DW	DW	DW	DW
FLASHING OPERATION	FL/Y	FL/Y	FL/Y	FL/Y	FL/Y	FL/Y	FL/R	FL/R	FL/R	FL/R	FL/R	FL/R	DARK	DARK	DARK	DARK

DIMENSION DIAGRAM

SCALE: 1" = 20'

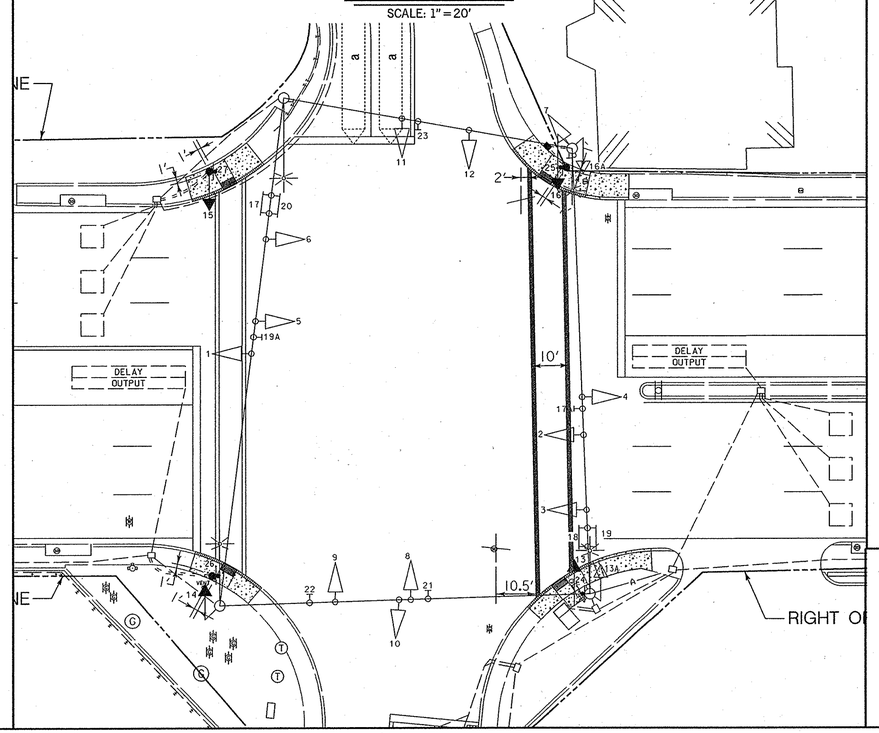

EQUIPMENT LIST "B"

B. EQUIPMENT TO BE FURNISHED AND/OR INSTALLED BY THE CONTRACTOR

ITEM NO.	QUANTITY	DESCRIPTION
1001	1 EACH	MAINTENANCE OF TRAFFIC
2001	23 C.Y.	CLASS 2 EXCAVATION
2002	3 C.Y.	TEST PIT EXCAVATION
5003	230 L.F.	12 INCH HEAT APPLIED WHITE PERMANENT PREFORMED THERMOPLASTIC PAVEMENT MARKINGS
5005	200 L.F.	REMOVAL OF EXISTING PERMANENT PAVEMENT LINE MARKINGS - ANY WIDTH
6001	64 L.F.	DEPRESSED CURB AND GUTTER
6002	28 L.F.	STANDARD TYPE A COMBINATION CURB AND GUTTER 12 INCH GUTTER PAN 8 INCH DEPTH
6003	660 S.F.	4 INCH CONCRETE SIDEWALK
8006	1 EACH	2-WIRE CENTRAL CONTROL UNIT
8014	4 EACH	AUDIBLE/TACTILE PEDESTRIAN PUSHBUTTON
8015	3 EACH	BREAKAWAY PEDESTAL POLE (ANY SIZE)
8024	4 EACH	LED 16 INCH COUNTDOWN PEDESTRIAN SIGNAL
8028	1 EACH	REMOVE AND DISPOSE OF EXISTING MATERIAL AND EQUIPMENT
8031	5 L.F.	2 INCH SCHEDULE 80 RIGID PVC CONDUIT - TRENCHED
8037	32 S.F.	DETECTABLE WARNING SURFACES
8040	3 C.Y.	CONCRETE FOR SIGNAL FOUNDATION
8043	10 L.F.	NO. 6 A.W.G. STRANDED BARE COPPER GROUND WIRE
8045	1 EACH	WEATHER HEAD, 3 INCH
8049	45 L.F.	3 INCH SCHEDULE 80 RIGID PVC CONDUIT - TRENCHED
8062	1 EACH	FURNISH AND INSTALL ELECTRICAL HANDHOLE
8064	4 S.F.	INSTALL OVERHEAD SIGN
8070	3 EACH	GROUND ROD - 3/4 INCH DIAMETER x 10 FOOT LENGTH
8074	2 EACH	CUT, CLEAN, GALVANIZE AND CAP TRAFFIC SIGNAL STRUCTURE
8076	985 L.F.	ELECTRICAL CABLE - 2 CONDUCTOR (NO. 14 A.W.G)
8078	660 L.F.	ELECTRICAL CABLE - 5 CONDUCTOR (NO. 14 A.W.G)

MODIFIED PEDESTAL POLE FOUNDATION

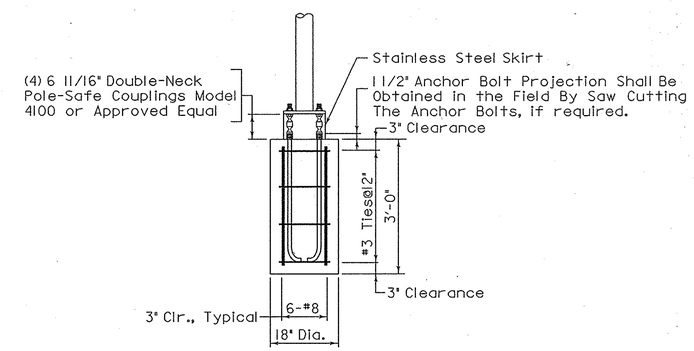

TOD No: AT782-58
SHA No.: BA563A57/B57
US 1 @ Various Locations - APS

STATE OF MARYLAND
DEPARTMENT OF TRANSPORTATION
STATE HIGHWAY ADMINISTRATION
OFFICE OF TRAFFIC & SAFETY
TRAFFIC ENGINEERING DESIGN DIVISION

U.S. 1 (Belair Road) and
Putty Hill Road/Ridge Road

Whitman, Requardt and Associates, LLP
801 South Caroline Street
Baltimore, Maryland 21231
(410) 235-3450

GENERAL INFORMATION SHEET

SCALE NONE	DATE 11/07/2006	CONTRACT NO. AT7825185	
DESIGNED BY S. BLOSS		COUNTY BALTIMORE	
DRAWN BY S. BLOSS		LOGMILE	
CHECKED BY N. LEARY		TIMS NO. H330	
FAP NO.		TOD NO.	
TS NO. 631 D	DRAWING -	OF	SHEET NO. 6 OF 10

PLOTTED: 11/22/2006
FILE: n:\31556-039\CADD\pSG-N002_us1puttyhill.dgn

BY: sbloss