F H W A REGION NO.	STATE	FED. AID PROJ. NO.	SHEET NO.	TOTAL SHEETS
3	MD			

EXISTING SIGNALS

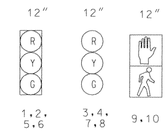

EXISTING SIGNS

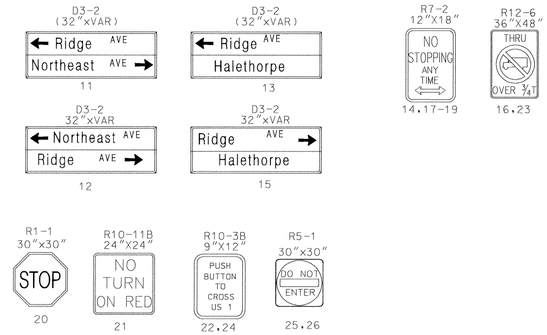

NEMA PHASING

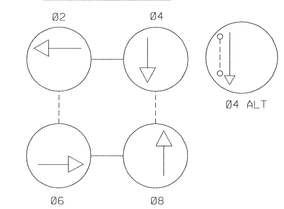

FLASHING OPERATION

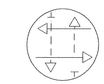

PHASING NOTES:

1. PHASES ASSOCIATED BY A SOLID LINE WILL NOT OPERATE CONCURRENTLY.
2. PHASES ASSOCIATED BY A DASHED LINE SHALL OPERATE CONCURRENTLY.

U.S. 1 (ALT) IS ASSUMED TO RUN IN A NORTH / SOUTH DIRECTION

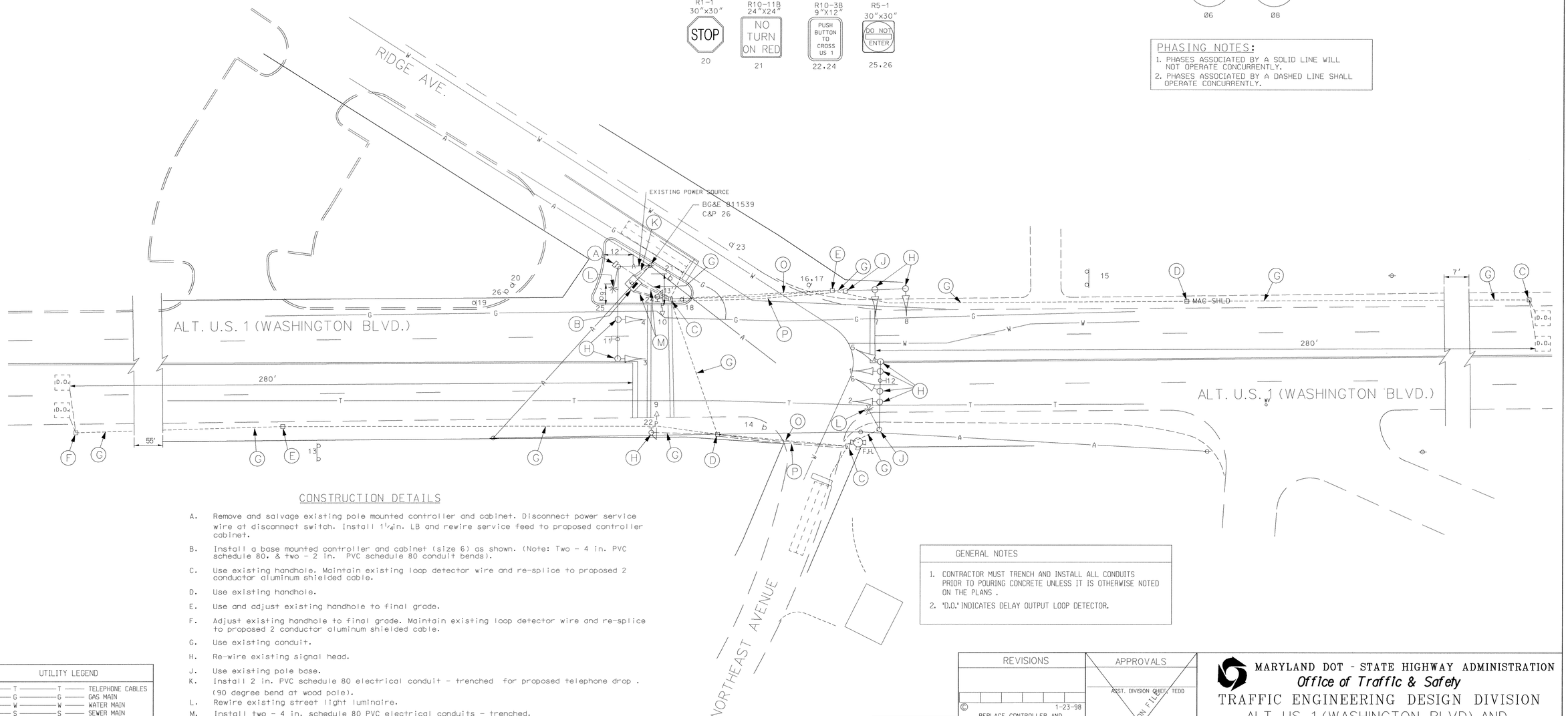

CONSTRUCTION DETAILS

A. Remove and salvage existing pole mounted controller and cabinet. Disconnect power service wire at disconnect switch. Install 1¼in. LB and rewire service feed to proposed controller cabinet.

B. Install a base mounted controller and cabinet (size 6) as shown. (Note: Two - 4 in. PVC schedule 80, & two - 2 in. PVC schedule 80 conduit bends).

C. Use existing handhole. Maintain existing loop detector wire and re-splice to proposed 2 conductor aluminum shielded cable.

D. Use existing handhole.

E. Use and adjust existing handhole to final grade.

F. Adjust existing handhole to final grade. Maintain existing loop detector wire and re-splice to proposed 2 conductor aluminum shielded cable.

G. Use existing conduit.

H. Re-wire existing signal head.

J. Use existing pole base.

K. Install 2 in. PVC schedule 80 electrical conduit - trenched for proposed telephone drop. (90 degree bend at wood pole).

L. Rewire existing street light luminaire.

M. Install two - 4 in. schedule 80 PVC electrical conduits - trenched.

O. Cap and abandon existing conduit.

P. Install 3 in. PVC schedule 80 electrical conduit - slotted.

GENERAL NOTES

1. CONTRACTOR MUST TRENCH AND INSTALL ALL CONDUITS PRIOR TO POURING CONCRETE UNLESS IT IS OTHERWISE NOTED ON THE PLANS.
2. "D.O." INDICATES DELAY OUTPUT LOOP DETECTOR.

UTILITY LEGEND

T	TELEPHONE CABLES
G	GAS MAIN
W	WATER MAIN
S	SEWER MAIN
E	ELECTRIC CABLES
A	AERIAL CABLES
BC	BURIED CABLE
SD	STORM DRAIN

GEOMETRIC LEGEND

EXISTING GEOMETRICS

PROPOSED GEOMETRICS

EBA
EBA ENGINEERING, INC.
5800 METRO DRIVE
BALTIMORE, MARYLAND 21215
•410• 358-7171

DCL
CONSULTING ENGINEERS
COLUMBIA, MARYLAND

REVISIONS

©	1-23-98 REPLACE CONTROLLER AND CABINET. ADD PHONE DROP
DCL LSC	
B	ASBUILT AND REPLACE POLE SOUTHWEST QUADRANT SHA NO. BW-214-801-412

APPROVALS

ORIGINAL ON FILE

ASST. DIVISION CHIEF, TEDD

ASST. DISTRICT ENGINEER, TRAFFIC

CHIEF, TRAFFIC ENGINEERING DESIGN DIVISION

DIRECTOR, OFFICE OF TRAFFIC & SAFETY

MARYLAND DOT - STATE HIGHWAY ADMINISTRATION
Office of Traffic & Safety
TRAFFIC ENGINEERING DESIGN DIVISION
ALT US 1 (WASHINGTON BLVD) AND RIDGE AVE./NORTHEAST AVENUE

LOGMILE #: 03A00101.16

DATE 10/23/73

DRAWN BY:	J. GORDON	F.A.P. NO.		PLAN SHEET NO.:	SHEET NO.
CHECK BY:		S.H.A. NO.	AW114A591B59	TS-485C	3 OF 8
SCALE:	1"=20'	COUNTY	BALTIMORE		