PHASE CHART

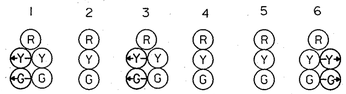

PHASE 1	G	G	R	R	R	G	
1 CHANGE	Y	G	R	R	R	Y	
PHASE 2	R	R	G G	G	R	R	
2 CHANGE	R	R	Y Y	Y	R	R	
PHASE 4	R	R	R	R	G	G	
4 CHANGE	R	R	R	R	Y	Y	
FLASHING OPERATION	FL/R	FL/R	FL/R	FL/R	FL/R	FL/R	

WIRING DIAGRAM

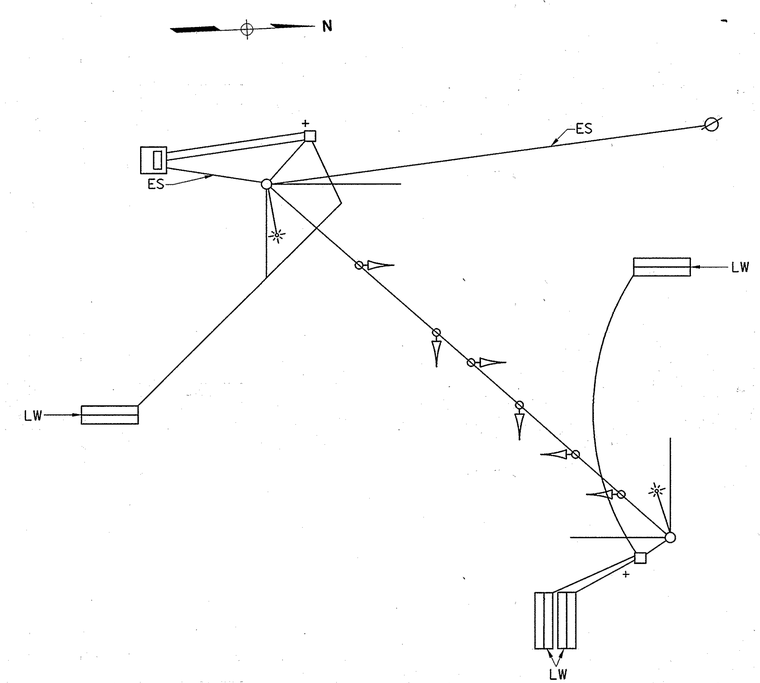

WIRING KEY

LW - LOOP WIRE (NO. 14 A.W.G.)

ES - EXISTING SERVICE

+ - ¾IN. x 10 FT. GROUND ROD

PROJECT DESCRIPTION

GENERAL:

THIS PROJECT INVOLVES THE MODIFICATION OF THE EXISTING INTERSECTION TRAFFIC SIGNAL AND STREET LIGHTING AT MD 146 AND HAMPTON LANE IN BALTIMORE COUNTY. MD 146 IS ASSUMED TO RUN IN A NORTH-SOUTH DIRECTION.

INTERSECTION OPERATION:
1. NORMAL OPERATION

THE INTERSECTION WILL OPERATE IN A NEMA THREE PHASE, SEMI-TRAFFIC ACTUATED MODE, WITH THE MD 146 APPROACHES RUNNING SPLIT AND HAMPTON LANE RUNS ALONE

CONTROLLER REQUIREMENTS:

A FULL-TRAFFIC-ACTUATED, EIGHT-PHASE CONTROLLER WITH THREE (3) FOUR-CHANNEL, TIME DELAY OUTPUT LOOP DETECTOR AMPLIFIERS. INTERSECTION MONITOR WITH BATTERY BACK-UP FOR PHONE DROP, WITH SYSTEMS PACKAGE HOUSED IN A NEMA SIZE "6" BASE MOUNTED CABINET.

SPECIAL NOTE:

UPON COMPLETION OF THIS PROJECT, THE CONTRACTOR SHALL NOTIFY MR. ROBERT SNYDER OF SHA AT (410) 787-7631 TO ARRANGE FOR THE PHONE LINE INSTALLATION. THE CONTRACTOR IS TO PROVIDE MR. SNYDER WITH THE NEAREST STREET ADDRESS, ZIP CODE AND PHONE NUMBER.

MAINTENANCE OF TRAFFIC

THE TRAFFIC CONTROL NUMBERS SHALL BE REFERENCED FOR THE PROJECT.

STANDARD NO. MD-105.00
STANDARD NO. MD-105.01
STANDARD NO. MD-105.02
STANDARD NO. MD-105.101 (FLAGGING OPERATION)
STANDARD NO. MD-105.103 (INTERSECTION FLAGGING OPERATION)
STANDARD NO. MD-105.105 (SHOULDER WORK)
STANDARD NO. MD-105.107 (LANE SHIFT)
STANDARD NO. MD-105.109 (LANE SHIFT)

NOTE: STANDARDS TO BE MODIFIED, BY REPLACING W21-5 SIGN WITH A W29-1 SIGN (ROAD WORK AHEAD).

PROJECT CONTACTS

THE CONTACT PERSONS FOR DISTRICT #5 ARE AS FOLLOWS:

MR. DAVID MALKOWSKI
DISTRICT ENGINEER
PHONE: 410-321-2780

MR. RANDELL SCOTT
ASSISTANT DISTRICT ENGINEER - TRAFFIC
PHONE: 410-841-5450

MR. JOE McMAHON
UTILITY ENGINEER
PHONE: 410-321-2780

MR. RICHARD L. DAFF, SR.
CHIEF, TRAFFIC OPERATIONS DIVISION
PHONE: 410-787-7630

THE POWER COMPANY REPRESENTATIVE IS:
BALTIMORE GAS ELECTRIC COMPANY
MR. JOSEPH G. BUNCH
INDUSTRIAL / COMMERCIAL SERVICES
NEW BUSINESS CONSTRUCTION
7317 PARKWAY DRIVE SOUTH
HANOVER, MARYLAND 21076
410-859-9030

STAGE 2C
TEMPORARY TRAFFIC SIGNALS

SS-12

RK&K
RUMMEL, KLEPPER & KAHL, LLP
CONSULTING ENGINEERS
81 MOSHER STREET
BALTIMORE, MARYLAND 21217
TEL: (410) 728-2900 FAX: (410) 383-3270

REVISIONS:

(E) November, 1998 Reconstruct Due To New Geometrics. SHA No: BA9775372

APPROVALS:

CHIEF SIGNAL DESIGN SECTION
ASST. DISTRICT ENGINEER TRAFFIC
CHIEF TRAFFIC ENGINEERING DESIGN DIVISION
DIRECTOR OFFICE OF TRAFFIC & SAFETY

ORIGINAL ON FILE

MDOT - STATE HIGHWAY ADMINISTRATION
Office of Traffic & Safety
TRAFFIC ENGINEERING DESIGN DIVISION LOG MILE # 03014600.85

DRAWN BY: SMH
DES. BY: DLA/SMH
CHK. BY: BJH

MD 146 (DULANEY VALLEY ROAD) AT
I-695 RAMPS/HAMPTON LANE
SIGNAL PLAN
COUNTY: BALTIMORE

DATE: NOVEMBER, 1998 F.A.P. NO. SEE TITLE SHEET
SCALE: N.T.S. S.H.A. NO. BA9775372

TS/STD. NO.: 454E-X2C-GI1
SHEET NO. 115 OF 155

11/12/98 17:27:38
k:\data\w695\dvrd\traffic\dgn\ssindvrd.dgn (SSINDVRD.PRF)