MD 140 IS ASSUMED TO RUN IN A NORTH-SOUTH DIRECTION

EXISTING SIGNS TO BE RELOCATED

37 — R7-1 12"X18"

38 — W14-2 30"X30"

PROPOSED SIGNS

23a,23b,24a,24b — D-3(1) 84"X16" (DUAL FACE)

25,27 — M1-5(4) 78"X36"

26,28 — M1-5(4) 78"X36"

EXISTING SIGNALS TO BE REMOVED

12" (7 EA.)

12" (1 EA.)

16" (8 EA.)

PROPOSED LED SIGNALS

1,2,3,6,7,8,9,10 — 12"

4,5 — 12"

11,12,13,14,15,16 — 16"

a,b,c,d,e,f — PROPOSED IP-BASED VIDEO DETECTION

NEMA PHASING

Ø2, Ø4, Ø4 ALT., FLASHING OPERATION, Ø5, Ø6, Ø8, Ø8 ALT.

PROPOSED ACCESSIBLE PUSHBUTTONS AND SIGNS

17,21 — MAIN ST R10-3(1) 9"X15"

18,22 — MAIN ST R10-3(1) 9"X15"

19 — CHATSWORTH AVE R10-3(1) 9"X15"

20 — CHATSWORTH AVE R10-3(1) 9"X15"

EXISTING SIGNS TO BE REMOVED

42,44,46,48 — 30"X30" 21"X15"

9"X12" (2 EA.)

41,43,45,47 — 30"X30" 21"X15"

9"X12" (2 EA.)

39 — 24"X12" 30"X24" 21"X15"

40 — 24"X12" 30"X24" 21"X15"

30"X36" (1 EA.)

84"X16" (2 EA.)

29,31,33,35 — S1-1 FYG 36"X36" M6-2 FYG 30"X24"

30,32,34,36 — S1-1 FYG 36"X36" M6-2 FYG 30"X24"

AERIAL CABLE DETAIL

PRIMARY	38'+
SECONDARY	35'+
COMMUNICATION	24'11"
COMMUNICATION	23'0"
COMMUNICATION	22'0"
GRADE	

AERIAL CABLE DETAIL

PRIMARY	33'7"
GUY WIRE	26'11"
COMMUNICATION	23'2"
COMMUNICATION	20'10"
COMMUNICATION	20'6"
GRADE	

SIGNAL HEAD DIMENSIONS

NORTHEAST CORNER: 9.5', 9.5', 1.5', 26', 7.5' 7.5' 19.5'

SOUTHEAST CORNER: 2.5', 12.5', 7', 26'

NORTHWEST CORNER: 7.5' 7.5' 2.5'

NOTE:
PHASES ASSOCIATED BY A DASHED LINE WILL OPERATE CONCURRENTLY.
PHASES ASSOCIATED BY A SOLID LINE WILL NOT OPERATE CONCURRENTLY.

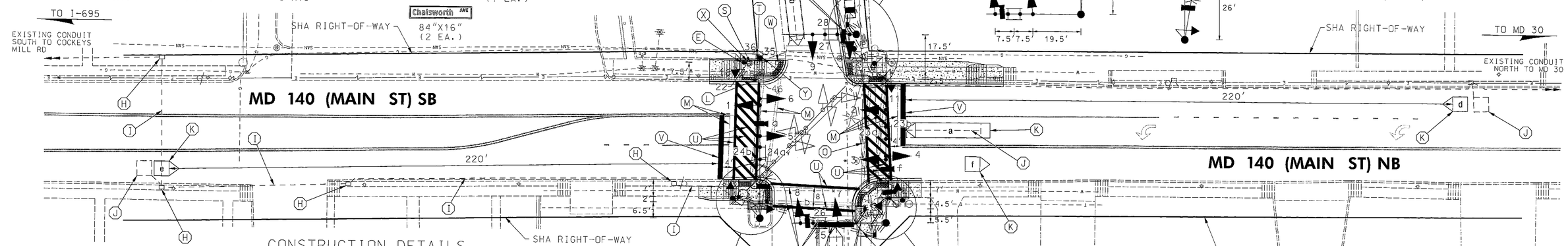

CONSTRUCTION DETAILS

A. INSTALL 27 FT. MAST ARM POLE WITH TWIN 50 FT. AND 50 FT. MAST ARMS, LED SIGNAL HEADS, 15 FT. LIGHTING ARM WITH LED LUMINAIRE, IP-BASED VIDEO DETECTION CAMERAS AND SIGNS. CUT MAST ARM POLE SPANNING CHATSWORTH AVENUE TO 38 FT. CUT, CLEAN, GALVANIZE AND CAP TRAFFIC SIGNAL STRUCTURE. NOTE: INSTALL 1-3 IN. CONDUIT BEND IN POLE BASE.

B. INSTALL 27 FT. MAST ARM POLE WITH 38 FT. MAST ARM, CUT TO 30 FT., LED SIGNAL HEADS, IP-BASED VIDEO DETECTION CAMERA AND SIGNS. NOTE: INSTALL 1-3 IN. CONDUIT BEND IN POLE BASE. CUT, CLEAN, GALVANIZE AND CAP TRAFFIC SIGNAL STRUCTURE.

C. INSTALL 27 FT. MAST ARM POLE WITH 50 FT. MAST ARM, LED SIGNAL HEADS, 15 FT. LIGHTING ARM WITH LED LUMINAIRE, LED COUNTDOWN PEDESTRIAN SIGNAL HEAD, IP-BASED VIDEO DETECTION CAMERAS AND SIGNS. FLANGE PLATE FOR MAST ARM SHALL BE INSTALLED AT 'T' DIMENSION = 22 FT. PER TYPICAL MD 818.06-01. FOUNDATION SHALL BE INSTALLED FLUSH WITH FINAL SIDEWALK GRADE. THE CONTRACTOR SHALL EXCAVATE THE EXISTING SIGN FOUNDATIONS FOR NEW MAST ARM POLE FOUNDATION. NO ADDITIONAL COMPENSATION WILL BE PROVIDED. NOTE: INSTALL 1-3 IN. CONDUIT BEND IN POLE BASE.

D. INSTALL 10 FT. BREAKAWAY PEDESTAL POLE WITH LED COUNTDOWN PEDESTRIAN SIGNAL HEADS, APS PUSHBUTTON AND SIGN (ORIENT PARALLEL TO MD 140 CROSSWALK). FOUNDATION SHALL BE INSTALLED FLUSH WITH FINAL SIDEWALK GRADE. REFER TO STANDARD MD 801.01-01 FOR FOUNDATION DETAILS. INSTALL 1-2 IN. CONDUIT BEND IN POLE BASE.

E. INSTALL 10 FT. BREAKAWAY PEDESTAL POLE WITH LED COUNTDOWN PEDESTRIAN SIGNAL HEAD, APS PUSHBUTTON AND SIGN (ORIENT PARALLEL TO CROSSWALK). FOUNDATION SHALL BE INSTALLED FLUSH WITH FINAL SIDEWALK GRADE. REFER TO STANDARD MD 801.01-01 FOR FOUNDATION DETAILS. INSTALL 1-2 IN. CONDUIT BEND IN POLE BASE.

F. INSTALL 5 FT. BREAKAWAY PEDESTAL POLE WITH APS PUSHBUTTON AND SIGN (ORIENT PARALLEL TO CROSSWALK). FOUNDATION SHALL BE INSTALLED FLUSH WITH FINAL SIDEWALK GRADE. REFER TO STANDARD MD 801.01-01 FOR FOUNDATION DETAILS. INSTALL 1-2 IN. CONDUIT BEND IN POLE BASE.

G. INSTALL 100 AMP EMBEDDED METERED SERVICE PEDESTAL. NOTE: INSTALL 1-4 IN. AND 3-2 IN. CONDUIT BENDS IN BASE. CAP UNUSED CONDUIT BENDS.

H. USE EXISTING HANDHOLE. SEE INTERCONNECT PLAN FOR DETAILS.

I. USE EXISTING CONDUIT. SEE INTERCONNECT PLAN FOR DETAILS.

J. ABANDON EXISTING LOOP DETECTOR.

K. PROPOSED VIDEO DETECTION ZONE.

L. REMOVE EXISTING GROUND MOUNTED SIGN AND SUPPORTS.

M. REMOVE EXISTING PAVEMENT MARKING.

N. INSTALL 4 IN. SCHEDULE 80 RIGID PVC CONDUIT - TRENCHED.

O. INSTALL 4 IN. SCHEDULE 80 RIGID PVC CONDUIT - SLOTTED.

P. INSTALL 3 IN. SCHEDULE 80 RIGID PVC CONDUIT - TRENCHED.

Q. INSTALL ELECTRICAL HANDHOLE.

R. INSTALL 4 IN. SCHEDULE 80 RIGID PVC CONDUIT - TRENCHED. STUB AT UTILITY POLE NO. 211773 FOR POWER FEED.

S. INSTALL 2 IN. SCHEDULE 80 RIGID PVC CONDUIT - TRENCHED.

T. USE EXISTING HANDHOLE. ADJUST TO FINAL SIDEWALK GRADE. REPLACE FRAME AND COVER.

U. INSTALL 12 IN. WHITE PERMANENT PREFORMED THERMOPLASTIC PAVEMENT MARKING LINE.

V. INSTALL 24 IN. WHITE PERMANENT PREFORMED THERMOPLASTIC PAVEMENT MARKING LINE.

W. REMOVE EXISTING HANDHOLE. CAP AND ABANDON EXISTING CONDUITS. BACKFILL TO GRADE.

X. REMOVE EXISTING PEDESTAL POLE AND ASSOCIATED SIGNAL EQUIPMENT. CAP AND ABANDON CONDUITS. REMOVE EXISTING FOUNDATION 12 IN. BELOW GRADE AND BACKFILL TO GRADE.

Y. INSTALL GROUND MOUNTED SIGN ON 1-4"X6" WOOD SIGN SUPPORT (DRILLED).

Z. REMOVE EXISTING MAST ARM POLE AND ASSOCIATED SIGNAL EQUIPMENT. CAP AND ABANDON CONDUITS. REMOVE EXISTING FOUNDATION 12 IN. BELOW GRADE AND BACKFILL TO GRADE. EXISTING ELECTRICAL SERVICE EQUIPMENT TO BE DISCONNECTED BY BGE.

AA. USE EXISTING HANDHOLE. ADJUST TO FINAL SIDEWALK GRADE. REPLACE FRAME AND COVER. DISCONNECT, PULLBACK AND REROUTE EXISTING INTERCONNECT CABLE. SEE INTERCONNECT PLAN FOR DETAILS.

BB. INSTALL BASE MOUNTED CABINET AND CONTROLLER WITH 2-WIRE APS CENTRAL CONTROL UNIT AND IP-BASED VIDEO DETECTION INTERFACE EQUIPMENT. NOTE: INSTALL 2-4 IN. AND 2-2 IN. CONDUIT BENDS IN BASE. CAP UNUSED CONDUIT BEND

CC. INSTALL 10 FT. BREAKAWAY PEDESTAL POLE WITH LED COUNTDOWN PEDESTRIAN SIGNAL HEAD, APS PUSHBUTTON AND SIGN (ORIENT PARALLEL TO CROSSWALK). FOUNDATION SHALL BE INSTALLED FLUSH WITH FINAL SIDEWALK GRADE. THE CONTRACTOR SHALL INSTALL AFTER THE EXISTING MAST ARM POLE HAS BEEN REMOVED. IT IS NECESSARY TO EXCAVATE THE EXISTING FOUNDATION FOR NEW MAST ARM POLE FOUNDATION. NO ADDITIONAL COMPENSATION WILL BE PROVIDED. REFER TO STANDARD MD 801.01-01 FOR FOUNDATION DETAILS. INSTALL 1-2 IN. CONDUIT BEND IN POLE BASE.

DD. INSTALL RELOCATED GROUND MOUNTED SIGNS ON 1-4"X4" WOOD SIGN SUPPORT. REMOVE EXISTING SUPPORTS.

GEOMETRIC LEGEND

- EXISTING
- PROPOSED

UTILITY LEGEND

- SD — STORM DRAIN
- G — GAS MAIN
- W — WATER MAIN
- S — SEWER MAIN
- E — ELECTRIC CABLES
- E — AERIAL CABLES
- T — TELEPHONE CABLES
- F — FIBER-OPTIC

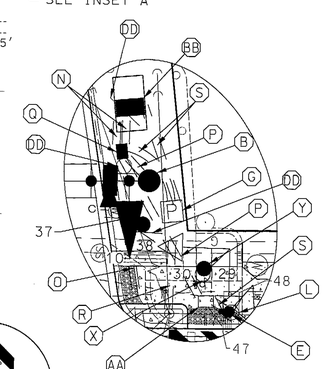

INSET B
NOT TO SCALE

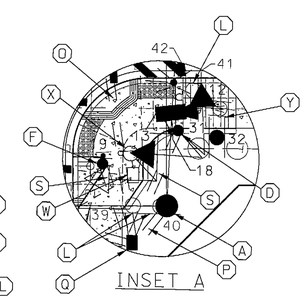

INSET A
NOT TO SCALE

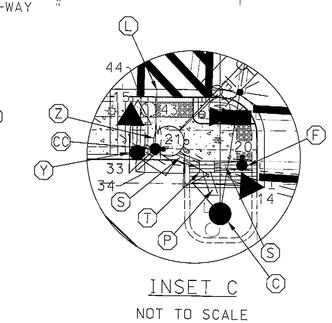

INSET C
NOT TO SCALE

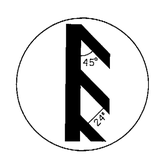

CROSSWALK DETAIL

RK&K
Rummel, Klepper & Kahl, LLP
81 MOSHER STREET | BALTIMORE, MD 21217
PH: (410) 728-2900 FAX: (410) 728-3160
Engineers Construction Managers Planners Scientists
www.rkk.com

APPROVALS

TEAM LEADER
ASST. DIV. CHIEF
DIVISION CHIEF
OFFICE DIRECTOR

ORIGINAL ON FILE

REVISIONS

C	RECONSTRUCT SIGNAL. INSTALL APS/CPS SHA NO. XX515165 / TIMS NO. L825				02-2013
B	INSTALL E/P PHASE FOR MD 140 SB LEFT TURN SHA NO. XX1065385				05-14-2002
A	REBUILD AND INSTALL INTERCONNECT SHA NO. B-156-501-485				11-15-1994

GCP	DJD	DAZ	BRK	TH
JJD				

STATE OF MARYLAND
DEPARTMENT OF TRANSPORTATION
STATE HIGHWAY ADMINISTRATION
OFFICE OF TRAFFIC & SAFETY
TRAFFIC ENGINEERING DESIGN DIVISION

MD 140 (MAIN STREET) AT CHATSWORTH ROAD
REISTERSTOWN, MARYLAND

TRAFFIC SIGNAL PLAN

SCALE 1"=20' DATE 09-20-1973 CONTRACT NO. BA766A59/B59

DESIGNED BY
DRAWN BY W.R.
CHECKED BY M.R.
FAP NO.

COUNTY BALTIMORE
LOGMILE 03014009.73
TIMS NO.
TOD NO.

TS NO. 822C DRAWING SP-3 OF 4 SHEET NO. 1 OF 7

PLOTTED: Tuesday, February 19, 2013 AT 01:11 PM
FILE: \\balsrv03\2008\2008\08148_icddas\Task 157_MD 140 at Cockeys & Chatsworth\CADD\pSG-0003_MD140@Chatsworth.dgn

BY: WFW