## PROJECT DESCRIPTION

### GENERAL

THIS PROJECT INVOLVES THE INSTALLATION OF A HAZARD IDENTIFICATION BEACON IN THE CONCRETE MEDIAN OF MD 26 AT LIBERTY COURT SHOPPING CENTER IN BALTIMORE COUNTY.

### H.I.B. OPERATION

A TWO CIRCUIT FLASHER UNIT HOUSED IN A POLE MOUNTED CABINET SHALL BE INSTALLED AT THIS LOCATION. THE YELLOW TRAFFIC SIGNAL HEADS MOUNTED AT THE TOP OF THE PEDESTAL POLE SHALL FLASH ALTERNATELY AT ALL TIMES. PEDESTRIAN CROSSING SIGNS (W11-2) AND DIRECTIONAL ARROW SIGNS (W16-7P) SHALL BE FLORESCENT YELLOW AND BLACK. THESE SIGNS SHALL BE PLACED ON THE PEDESTAL POLE FOR BOTH EAST AND WESTBOUND APPROACHES ALONG MD 26.

1. THE FOLLOWING CONTACT PERSONS FOR THIS PROJECT ARE AS FOLLOWS:

**PROJECT CONTACTS:**

MR. RANDAL SCOTT, ASSISTANT DISTRICT ENGINEER - TRAFFIC
PHONE: (410) 321-2841
MR. DANIAL WITT, ASSISTANT DISTRICT ENGINEER - CONSTRUCTION
PHONE: (410) 321-2821
MR. STEVE MARCISZEWSKI, ASSISTANT DISTRICT ENGINEER - MAINTENANCE
PHONE: (410) 321-2761
MS. SUENETTE POPE, UTILITY ENGINEER
PHONE: (410) 321-2841
MR. RICHARD L. DAFF, SR. CHIEF TRAFFIC OPERATIONS DIVISION
PHONE: (410) 787-7630

### EQUIPMENT LIST

A. EQUIPMENT TO BE SUPPLIED BY THE ADMINISTRATION.

| CATEGORY CODE NO. | DESCRIPTION | UNITS | QUANTITY |
|---|---|---|---|
| 900000 | SHEET ALUMINUM POLE MOUNTED SIGNS CONSISTING OF: | SF | 28 |
| | W11-2(36"X36") POLE MOUNT | EA | 2 |
| | W16-7P (24"x30") POLE MOUNT | EA | 2 |
| 971040 | TWO CIRCUIT FLASHER AND CABINET - POLE MOUNT | EA | 1 |

B. EQUIPMENT TO BE FURNISHED AND/OR INSTALLED BY THE CONTRACTOR.

| CATEGORY CODE NO. | DESCRIPTION | UNITS | QUANTITY |
|---|---|---|---|
| 203030 | TEST PIT EXCAVATION | CY | 1 |
| 210026 | REMOVE EXISTING SIDEWALK | CY | 9 |
| 655105 | 5 INCH CONCRETE SIDEWALK | SF | 30 |
| 801004 | CONCRETE FOR SIGNAL FOUNDATION | CY | 1 |
| 802501 | NO. 6 AWG STRANDED BARE COPPER GROUND WIRE | LF | 210 |
| 802502 | NO. 4 AWG STRANDED BARE COPPER GROUND WIRE | LF | 10 |
| 805125 | 2 INCH SCHED. 80 RIGID PVC CONDUIT-TRENCHED | LF | 10 |
| 805140 | 4 INCH SCHED. 80 RIGID PVC CONDUIT-TRENCHED | LF | 25 |
| 805145 | 2 INCH SCHED. 80 RIDIG PVC CONDUIT-SLOTTED | LF | 30 |
| 805155 | 4 INCH SCHED. 80 RIGID PVC CONDUIT-SLOTTED | LF | 140 |
| 807202 | METERED SERVICE PEDESTAL | EA | 1 |
| 810022 | ELECTRICAL CABLE 1-CONDUCTOR, NO. 8 AWG-THHN/THWN | LF | 150 |
| 811001 | FURNISH AND INSTALL ELECTRICAL HANDHOLE | EA | 1 |
| 813015 | INSTALL OVERHEAD SIGN | SF | 28 |
| 818010 | 14 FOOT BREAKAWAY PEDESTAL POLE | EA | 1 |
| 821003 | BREAKAWAY BASE SUPPORT FOR SIGNAL STRUCTURES | EA | 1 |
| 834001 | CONNECTOR KIT - TYPE I | EA | 2 |
| 837001 | GROUND ROD - 3/4 INCH DIAMETER X 10 FOOT LENGTH | EA | 4 |
| 860284 | 12 INCH LED VEHICULAR TRAFFIC SIGNAL HEAD SECTION | EA | 4 |
| 861106 | ELECTRICAL CABLE - 3 CONDUCTOR (NO. 14 AWG) | LF | 70 |
| 871040 | INSTALL TWO CIRCUIT FLASHER AND CABINET - POLE MOUNT | EA | 1 |

### CONSTRUCTION DETAILS

A. INSTALL CONCRETE FOUNDATION WITH 14 FT. STEEL PEDESTAL POLE WITH BREAKAWAY BASE, POLE MOUNTED SIZE "G" CABINET, TRAFFIC SIGNAL HEADS AND SIGNS. (NOTE: TWO 2 IN. PVC SCHEDULE 80 CONDUIT BEND).

B. INSTALL 4 IN. PVC SCHEDULE 80 ELECTRICAL CONDUIT FOR ELECTRICAL SERVICE - TRENCHED. STUB OUT CONDUIT BEND AT BASE OF UTILITY POLE.

C. INSTALL 4 IN. PVC SCHEDULE 80 ELECTRICAL CONDUIT - SLOTTED.

D. INSTALL HANDHOLE.

E. INSTALL 100 AMP METER SERVICE PEDESTAL.

F. REMOVE CONCRETE SIDEWALK INSTALL 4 IN. PVC SCHEDULE 80 ELECTRICAL CONDUIT - TRENCHED, THEN REPLACE WITH 5 IN. CONCRETE SIDEWALK.

G. PRIOR TO THE INSTALLATION OF THE CONCRETE MEDIAN AND AFTER THE CLASS II EXCAVATION THE CONTRACTOR SHALL INSTALL 2 IN. PVC SCHEDULE 80 ELECTRICAL CONDUIT - TRENCHED.

H. INSTALL 2 IN. PVC SCHEDULE 80 ELECTRICAL CONDUIT - SLOTTED.

J. REMOVE CONCRETE SIDEWALK INSTALL 2 IN. PVC SCHEDULE 80 ELECTRICAL CONDUIT - TRENCHED, THEN REPLACE WITH 5 IN. CONCRETE SIDEWALK.

### GEOMETRIC LEGEND

EXISTING
PROPOSED

### UTILITY LEGEND

STORM DRAIN
GAS MAIN
WATER MAIN
SEWER MAIN
ELECTRIC CABLES
AERIAL CABLES
TELEPHONE CABLES
FIBER-OPTIC

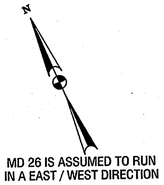


### SIGNS TO BE INSTALLED BY OTHERS

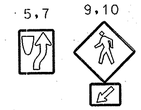


### PROPOSED SIGNS

W11-2 (36"x36") FL/Y

W16-7P (24"x30") FL/Y

NOTE:
FOR INSTALLATION OF SIGNS REFER TO PLAN SHEETS PS01 THROUGH PS04 OF THE CONTRACT DOCUMENTS

### PROPOSED SIGNALS

1-4
Y
12"LED

# LIBERTY COURT SHOPPING CENTER

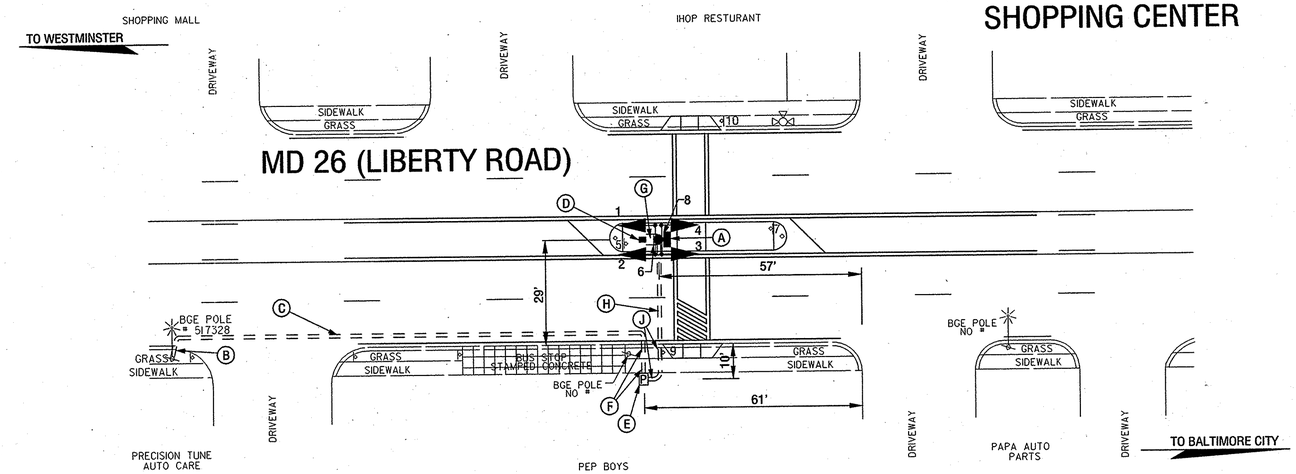


## PEDESTRIAN ISLAND 'D'

NOT TO SCALE

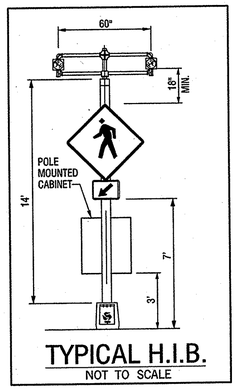


## TYPICAL H.I.B.

NOT TO SCALE

## WIRING DIAGRAM

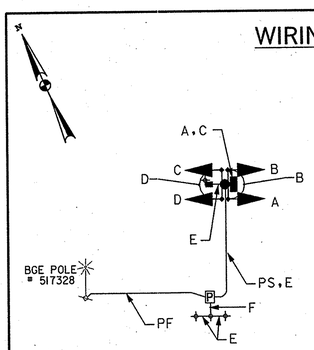


KEY

A, B, C, D } 3 CONDUCTOR ELECTRICAL CABLE (NO. 14 AWG)
E } 1 CONDUCTOR NO. 6 AWG STRANDED BARE COPPER GROUND WIRE
F } 1 CONDUCTOR NO. 4 AWG STRANDED BARE COPPER GROUND WIRE
PS } POWER SERVICE UNDERGROUND 2-WIRE, 1 CONDUCTOR (NO. 8 AWG)
PF } PROPOSED UNDERGROUND FEED BY OTHERS
+ GROUND ROD

NOTE:
CONNNECTOR KIT TYPE I FOR SERVICE CABLES - 2EACH IN POLE BASE

### GENERAL NOTES

1. THE CONTRACTOR SHALL VERIFY ALL PROPOSED POLE LOCATIONS PRIOR TO INSTALLATION.
2. THE CONTRACTOR SHALL VERIFY ALL UNDERGROUND UTILITIES PRIOR TO INSTALLING PROPOSED EQUIPMENT. IF ANY UTILITY CONFLICTS SHOULD ARISE THE CONTRACTOR SHALL CONTACT THE PROJECT ENGINEER.
3. ALL TRAFFIC SIGNAL FOUNDATIONS SHALL BE INSTALLED AT THE FINAL SIDEWALK OR CURB GRADE FOR CLOSED SECTIONS, HIGHEST ROADWAY PROFILE GRADE FOR OPEN SECTIONS, TO MEET CLEARANCES AS SPECIFIED IN MD 816.03, MD 818.01, MD 818.02, MD 818.04. THE CONTRACTOR SHALL VERIFY ULTIMATE GRADES PRIOR TO THE INSTALLATION OF ALL EQUIPMENT.
4. FOR INSTALLATION OF ADA RAMPS, CROSSWALK STRIPING AND CONCRETE MEDIAN ISLANDS REFER TO PLAN SHEETS PS01 THROUGH PS04 OF THE CONTRACT DOCUMENTS.

TCD 4

SHA
STATE OF MARYLAND
DEPARTMENT OF TRANSPORTATION
STATE HIGHWAY ADMINISTRATION
OFFICE OF TRAFFIC & SAFETY
TRAFFIC ENGINEERING DESIGN DIVISION

## MD 26 (LIBERTY ROAD) AT LIBERTY COURT SHOPPING CENTER (H.I.B.)

BALTIMORE, MARYLAND

SABRA, WANG & ASSOCIATES, INC.
1504 JOH AVENUE
SUITE 160
BALTIMORE, MD 21227
(410) 737-6564
WWW.SABRA-WANG.COM

| APPROVALS | |
|---|---|
| BAM LEADER | 12/12/05 |
| ASST. DIV. CHIEF | 12/12/05 |
| DIVISION CHIEF | 12/15 |
| OFFICE DIRECTOR | |

REVISIONS

TRAFFIC CONTROL DEVICE

SCALE NONE DATE 11/2005 CONTRACT NO. BA4845176

DESIGNED BY S. SMITH COUNTY BALTIMORE
DRAWN BY S. SMITH LOGMILE 03026005.90
CHECKED BY S. RENZI T.I.M.S. NO. 0503
F.A.P. NO. N/A TOD NO. N/A

DRAWING NO. TS-4404 SHEET NO. OF

PLOTTED: WEDNESDAY, DECEMBER 07, 2005 AT 05:10 PM
FILE: R:\2003\04 BCS 2003-04B\TASK 4\DWG\HIBS\PSG-P001-M26.DGN

BY:JHARTMAN