PROJECT DESCRIPTION

GENERAL

THIS PROJECT INVOLVES THE INSTALLATION OF A HAZARD IDENTIFICATION BEACON IN THE CONCRETE MEDIAN OF MD 26 AT LIBERTY COURT SHOPPING CENTER IN BALTIMORE COUNTY.

H.I.B. OPERATION

A TWO CIRCUIT FLASHER UNIT HOUSED IN A POLE MOUNTED CABINET SHALL BE INSTALLED AT THIS LOCATION. THE YELLOW TRAFFIC SIGNAL HEADS MOUNTED AT THE TOP OF THE PEDESTAL POLE SHALL FLASH ALTERNATELY AT ALL TIMES. PEDESTRIAN CROSSING SIGNS (W11-2) AND DIRECTIONAL ARROW SIGNS (W16-7P) SHALL BE FLORESCENT YELLOW AND BLACK. THESE SIGNS SHALL BE PLACED ON THE PEDESTAL POLE FOR BOTH EAST AND WESTBOUND APPROACHES ALONG MD 26.

1. THE FOLLOWING CONTACT PERSONS FOR THIS PROJECT ARE AS FOLLOWS:

PROJECT CONTACTS:

MR. RANDAL SCOTT, ASSISTANT DISTRICT ENGINEER - TRAFFIC
PHONE: (410) 321-2841
MR. DANIAL WITT, ASSISTANT DISTRICT ENGINEER - CONSTRUCTION
PHONE: (410) 321-2821
MR. STEVE MARCISZEWSKI, ASSISTANT DISTRICT ENGINEER - MAINTENANCE
PHONE: (410) 321-2761
MS. SUENETTE POPE, UTILITY ENGINEER
PHONE: (410) 321-2841
MR. RICHARD L. DAFF, SR. CHIEF TRAFFIC OPERATIONS DIVISION
PHONE: (410) 787-7630

EQUIPMENT LIST

A. EQUIPMENT TO BE SUPPLIED BY THE ADMINISTRATION.

CATEGORY CODE NO.	DESCRIPTION	UNITS	QUANTITY
900000	SHEET ALUMINUM POLE MOUNTED SIGNS CONSISTING OF:	SF	13
	W11-2(36"X36") POLE MOUNT	EA	2
	W16-7P(24"x12") POLE MOUNT	EA	2
971040	TWO CIRCUIT FLASHER AND CABINET - POLE MOUNT	EA	1

B. EQUIPMENT TO BE FURNISHED AND/OR INSTALLED BY THE CONTRACTOR.

CATEGORY CODE NO.	DESCRIPTION	UNITS	QUANTITY
203030	TEST PIT EXCAVATION	CY	1
210026	REMOVE EXISTING SIDEWALK	CY	9
655105	5 INCH CONCRETE SIDEWALK	SF	30
801004	CONCRETE FOR SIGNAL FOUNDATION	CY	1
802501	NO. 6 AWG STRANDED BARE COPPER GROUND WIRE	LF	210
802502	NO. 4 AWG STRANDED BARE COPPER GROUND WIRE	LF	10
805125	2 INCH SCHED. 80 RIGID PVC CONDUIT-TRENCHED	LF	10
805140	4 INCH SCHED. 80 RIGID PVC CONDUIT-TRENCHED	LF	25
805145	2 INCH SCHED. 80 RIDIG PVC CONDUIT-SLOTTED	LF	30
805155	4 INCH SCHED. 80 RIGID PVC CONDUIT-SLOTTED	LF	140
807202	METERED SERVICE PEDESTAL	EA	1
810022	ELECTRICAL CABLE 1-CONDUCTOR, NO. 8 AWG-THHN/THWN	LF	150
811001	FURNISH AND INSTALL ELECTRICAL HANDHOLE	EA	1
813015	INSTALL OVERHEAD SIGN	SF	13
818010	14 FOOT BREAKAWAY PEDESTAL POLE	EA	1
821003	BREAKAWAY BASE SUPPORT FOR SIGNAL STRUCTURES	EA	1
834001	CONNECTOR KIT - TYPE I	EA	2
837001	GROUND ROD - 3/4 INCH DIAMETER X 10 FOOT LENGTH	EA	4
860284	12 INCH LED VEHICULAR TRAFFIC SIGNAL HEAD SECTION	EA	4
861106	ELECTRICAL CABLE - 3 CONDUCTOR (NO. 14 AWG)	LF	70
871040	INSTALL TWO CIRCUIT FLASHER AND CABINET - POLE MOUNT	EA	1

CONSTRUCTION DETAILS

A. INSTALL CONCRETE FOUNDATION WITH 14 FT. STEEL PEDESTAL POLE WITH BREAKAWAY BASE, POLE MOUNTED SIZE "G" CABINET, TRAFFIC SIGNAL HEADS AND SIGNS. (NOTE: TWO 2 IN. PVC SCHEDULE 80 CONDUIT BEND).

B. INSTALL 4 IN. PVC SCHEDULE 80 ELECTRICAL CONDUIT FOR ELECTRICAL SERVICE - TRENCHED. STUB OUT CONDUIT BEND AT BASE OF UTILITY POLE.

C. INSTALL 4 IN. PVC SCHEDULE 80 ELECTRICAL CONDUIT - SLOTTED.

D. INSTALL HANDHOLE.

E. INSTALL 100 AMP METER SERVICE PEDESTAL.

F. REMOVE CONCRETE SIDEWALK INSTALL 4 IN. PVC SCHEDULE 80 ELECTRICAL CONDUIT - TRENCHED, THEN REPLACE WITH 5 IN. CONCRETE SIDEWALK.

G. PRIOR TO THE INSTALLATION OF THE CONCRETE MEDIAN AND AFTER THE CLASS II EXCAVATION THE CONTRACTOR SHALL INSTALL 2 IN. PVC SCHEDULE 80 ELECTRICAL CONDUIT - TRENCHED.

H. INSTALL 2 IN. PVC SCHEDULE 80 ELECTRICAL CONDUIT - SLOTTED.

J. REMOVE CONCRETE SIDEWALK INSTALL 2 IN. PVC SCHEDULE 80 ELECTRICAL CONDUIT - TRENCHED, THEN REPLACE WITH 5 IN. CONCRETE SIDEWALK.

GEOMETRIC LEGEND

EXISTING
PROPOSED

UTILITY LEGEND

SD — STORM DRAIN
G — GAS MAIN
W — WATER MAIN
SAN — SEWER MAIN
E — ELECTRIC CABLES
A — AERIAL CABLES
T — TELEPHONE CABLES
FO — FIBER-OPTIC

BY:SSMITH

SIGNS TO BE INSTALLED BY OTHERS

PROPOSED SIGNS

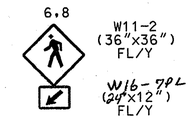

PROPOSED SIGNALS

1-4
Y
12"LED

NOTE:
FOR INSTALLATION OF SIGNS REFER TO PLAN SHEETS PS01 THROUGH PS04 OF THE CONTRACT DOCUMENTS

LIBERTY COURT SHOPPING CENTER

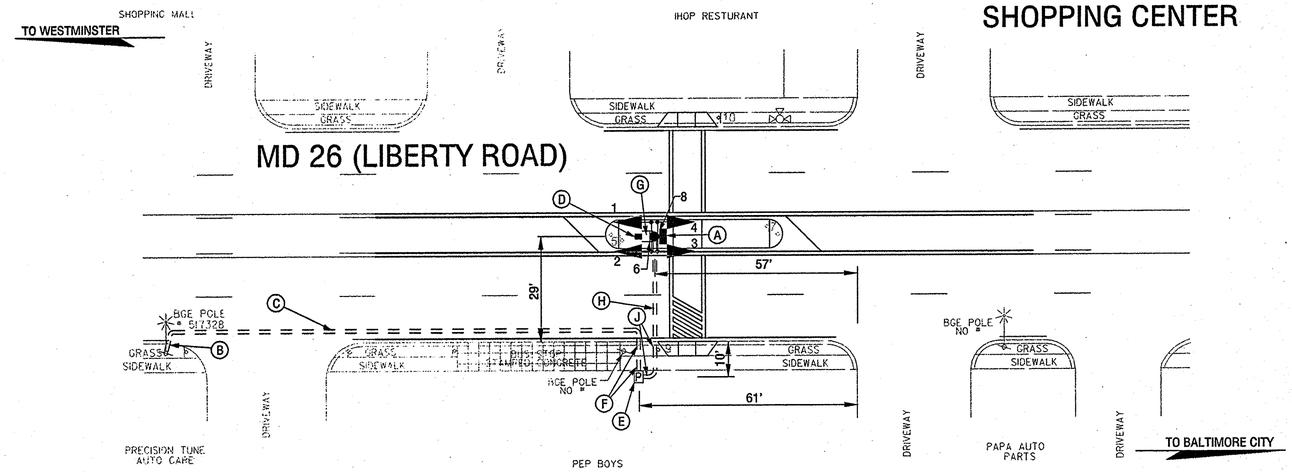

PEDESTRIAN ISLAND 'D'

NOT TO SALE

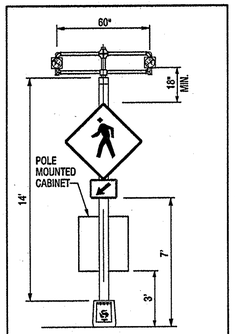

TYPICAL H.I.B.

NOT TO SALE

WIRING DIAGRAM

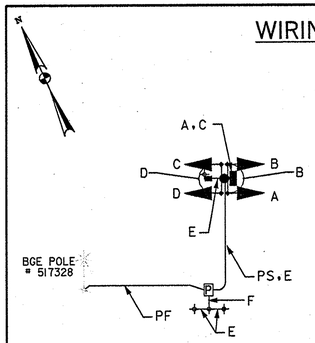

KEY

A, B, C, D — 3 CONDUCTOR ELECTRICAL CABLE (NO. 14 AWG)
E — 1 CONDUCTOR NO. 6 AWG STRANDED BARE COPPER GROUND WIRE
F — 1 CONDUCTOR NO. 4 AWG STRANDED BARE COPPER GROUND WIRE
PS — POWER SERVICE UNDERGROUND 2-WIRE, 1 CONDUCTOR (NO. 8 AWG)
PF — PROPOSED UNDERGROUND FEED BY OTHERS
✦ GROUND ROD

NOTE:
CONNNECTOR KIT TYPE I FOR SERVICE CABLES - 2EACH IN POLE BASE

GENERAL NOTES

1. THE CONTRACTOR SHALL VERIFY ALL PROPOSED POLE LOCATIONS PRIOR TO INSTALLATION.
2. THE CONTRACTOR SHALL VERIFY ALL UNDERGROUND UTILITIES PRIOR TO INSTALLING PROPOSED EQUIPMENT. IF ANY UTILITY CONFLICTS SHOULD ARISE THE CONTRACTOR SHALL CONTACT THE PROJECT ENGINEER.
3. ALL TRAFFIC SIGNAL FOUNDATIONS SHALL BE INSTALLED AT THE FINAL SIDEWALK OR CURB GRADE FOR CLOSED SECTIONS, HIGHEST ROADWAY PROFILE GRADE FOR OPEN SECTIONS, TO MEET CLEARANCES AS SPECIFIED IN MD 816.03, MD 818.01, MD 818.02, MD 818.04. THE CONTRACTOR SHALL VERIFY ULTIMATE GRADES PRIOR TO THE INSTALLATION OF ALL EQUIPMENT.
4. FOR INSTALLATION OF ADA RAMPS, CROSSWALK STRIPING AND CONCRETE MEDIAN ISLANDS REFER TO PLAN SHEETS PS01 THROUGH PS04 OF THE CONTRACT DOCUMENTS.

TCD 4

SHA
STATE OF MARYLAND
DEPARTMENT OF TRANSPORTATION
STATE HIGHWAY ADMINISTRATION
OFFICE OF TRAFFIC & SAFETY
TRAFFIC ENGINEERING DESIGN DIVISION

MD 26 (LIBERTY ROAD) AT LIBERTY COURT SHOPPING CENTER (H.I.B.)

BALTIMORE, MARYLAND

SABRA, WANG & ASSOCIATES, INC.
1504 JOH AVENUE
SUITE 160
BALTIMORE, MD 21227
(410) 737-8564
WWW.SABRA-WANG.COM

APPROVALS	
TEAM LEADER	6-14-05
ASST. DIV. CHIEF	6-14-05
DIVISION CHIEF	6/15/05
OFFICE DIRECTOR	

REVISIONS

TRAFFIC CONTROL DEVICE

SCALE NONE DATE 6/10/05 CONTRACT NO. BA4845176

DESIGNED BY S. SMITH — COUNTY BALTIMORE
DRAWN BY S. SMITH — LOGMILE 03026005.90
CHECKED BY S. RENZI — T.I.M.S. NO. 0503
F.A.P. NO. N/A — TOD NO. N/A

DRAWING NO. TS-4404 — SHEET NO. OF

PLOTTED: TUESDAY, JUNE 14, 2005 AT 11:41 AM
FILE: R:\2003\04 BCS 2003-048\TASK 4\DWG\HIBS\PSG-P001-M26.DGN